KAWNEER CLEARWALL CURTAINWALL SYSTEM
SSI (SILICONE GLAZED) and SSIT (TAPE GLAZED) OPTIONS
LARGE AND SMALL MISSILE IMPACT RESISTANT (WIND ZONE 3)

GENERAL NOTES:

1. THIS PRODUCT MEETS ALL THE REQUIREMENTS OF THE 9TH EDITION (2026) FLORIDA BUILDING CODE, FOR USE OUTSIDE THE HVHZ.
2. THIS SYSTEM HAS BEEN TESTED PER ASTM E283, E330, E1886, AND E1996 (WIND ZONE 3), FOR LARGE AND SMALL MISSILE IMPACT RESISTANCE. SHUTTERS ARE NOT REQUIRED IN WIND ZONE 3 OR LOWER.
3. GLASS TYPE 2 IS SMALL MISSILE IMPACT RESISTANT ONLY. SHUTTERS ARE NOT REQUIRED FOR INSTALLATIONS MORE THAN 30 FT. ABOVE GRADE.
4. DESIGN LOADS MUST BE CALCULATED BY A PROFESSIONAL ENGINEER OR ARCHITECT FOR EACH PROJECT. THE (ASD) DESIGN PRESSURE CANNOT EXCEED THE PRESSURES, LISTED ON SHEETS 9–11, FOR EACH COMPONENT OF THIS SYSTEM.
5. WOOD BUCKS BY OTHERS MUST BE ANCHORED PROPERLY TO TRANSFER IMPOSED LOADS TO THE STRUCTURE.
6. ANCHORS SHALL BE AS LISTED AND SPACED AS SHOWN ON DETAILS, ANCHOR EMBEDMENT IN BASE MATERIAL SHALL BE BEYOND WALL DRESSING OR STUCCO.
7. CODE REQUIREMENTS FOR SAFE GUARDS MUST BE OBSERVED.
8. THE GLASS CHART ON SHEET 6 IS BASED ON TESTED PRESSURES AND ASTM E 1300–16, AND ALSO LIMITED BY THE ALLOWABLE STRESS OF THE STRUCTURAL SILICONE (SSI OPTION) AND 3M TAPE (SSIT OPTION).
9. MATERIALS, INCLUDING BUT NOT LIMITED TO STEEL/METAL SCREWS, THAT COME INTO CONTACT WITH OTHER DISSIMILAR MATERIALS SHALL BE SEPARATED TO PREVENT GALVANIC REACTIONS PER FBC REQUIREMENTS.
10. STRUCTURAL SILICONE AT SSI APPLICATIONS TO BE DOW 995 OR TREMCO PROGLAZE SSG.

SYSTEM NOTES:

GLASS..... SEE CHARTS IN SECTION 05 FOR ALLOWABLE GLASS TYPES, SIZES AND DESIGN PRESSURES.

MULLIONS..... SEE CHARTS IN SECTION 04 FOR ALLOWABLE DESIGN PRESSURES FOR VARIOUS MULLION AND REINFORCEMENT CONFIGURATIONS.

JAMBS..... SEE CHARTS IN SECTION 04 (FREE JAMBS) AND SECTION 06 (FASTENED JAMB) FOR ALLOWABLE DESIGN PRESSURES.

HORIZONTALS..... SEE CHARTS IN SECTION 04 FOR ALLOWABLE HORIZONTAL MULLIONS AND DESIGN PRESSURES.

ANCHORS..... SEE CHARTS IN SECTION 06 FOR ALLOWABLE LOADS FOR HEAD/SILL ANCHORS AND MID–SPAN ANCHORS.

SYSTEM..... THE DESIGN PRESSURE OF THE ENTIRE SYSTEM IS THE LOWEST ALLOWABLE DESIGN PRESSURE OF THE COMPONENTS ABOVE.

DOORS..... DOORS AND THEIR SUB–FRAMES ARE NOT A PART OF THIS APPROVAL. PLEASE SEE SEPARATE APPROVAL FOR DOOR RATING, GLAZING, ANCHORS, HARDWARE, AND DETAILS.

TABLE OF CONTENTS

SHEET	DESCRIPTION
01	SECTION 1 – GENERAL NOTES / SECTION NOTES
02	SECTION 2 – SINGLE SPAN ELEVATION / WALL SECTION
03	MULTI–SPAN ELEVATION / WALL SECTION
04	SECTION 3 – HORIZONTAL DETAILS
05	HORIZONTAL DETAILS
06	JAMB/MULLION DETAILS
07	CORNER DETAILS
08	MULLION SPLICE DETAILS
09	SECTION 4 – MULLION LOAD TABLES
10	CORNER MULLION LOAD TABLES
11	SECTION 5 – LARGE/SMALL MISSILE GLAZING DETAILS
12	SECTION 6 – HEAD AND SILL ANCHOR DETAILS
13	HEAD AND SILL ANCHOR DETAILS
14	MID–SPAN ANCHOR DETAILS – STEEL SUBSTRATE
15	SECTION 7 – BILL OF MATERIALS
16	ISOMETRIC DETAIL – TOGGLE LOCATIONS

SCOTT WOLTERS LICENSE No 62354 STATE OF FLORIDA PROFESSIONAL ENGINEER

Digitally signed by Scott Wolters
Date: 2026.10.18 20:41:35 -04'00'

REV.#	DATE	
–	10/18/26	CODE UPDATE
2	4/13/21	DRAFTING REVISION
1	10/12/20	1ST SUBMITTAL
–		PRINTS ISSUED FOR

KAWNEER
AN ARCONIC COMPANY
5555 WINDWARD PARKWAY, SUITE 220
ALPHARETTA, GA 30004
PH: (770) 449–5555
WWW.KAWNEER.COM

SCOTT WOLTERS LICENSE No 62354 STATE OF FLORIDA PROFESSIONAL ENGINEER
OCT 18, 2026

SEAL:

SCOTT WOLTERS
FL PE# 62354

WOLTERS ENGINEERING
(COA# 27194)
15211 97TH ROAD N
WEST PALM BEACH, FL 33412
PH/FAX:(561) 225–1982

PRODUCT: CLEARWALL CURTAINWALL SYSTEM

DWG: CLRWL–IR

SECTION: 1

SHEET: 1/16

SINGLE SPAN ELEVATIONS

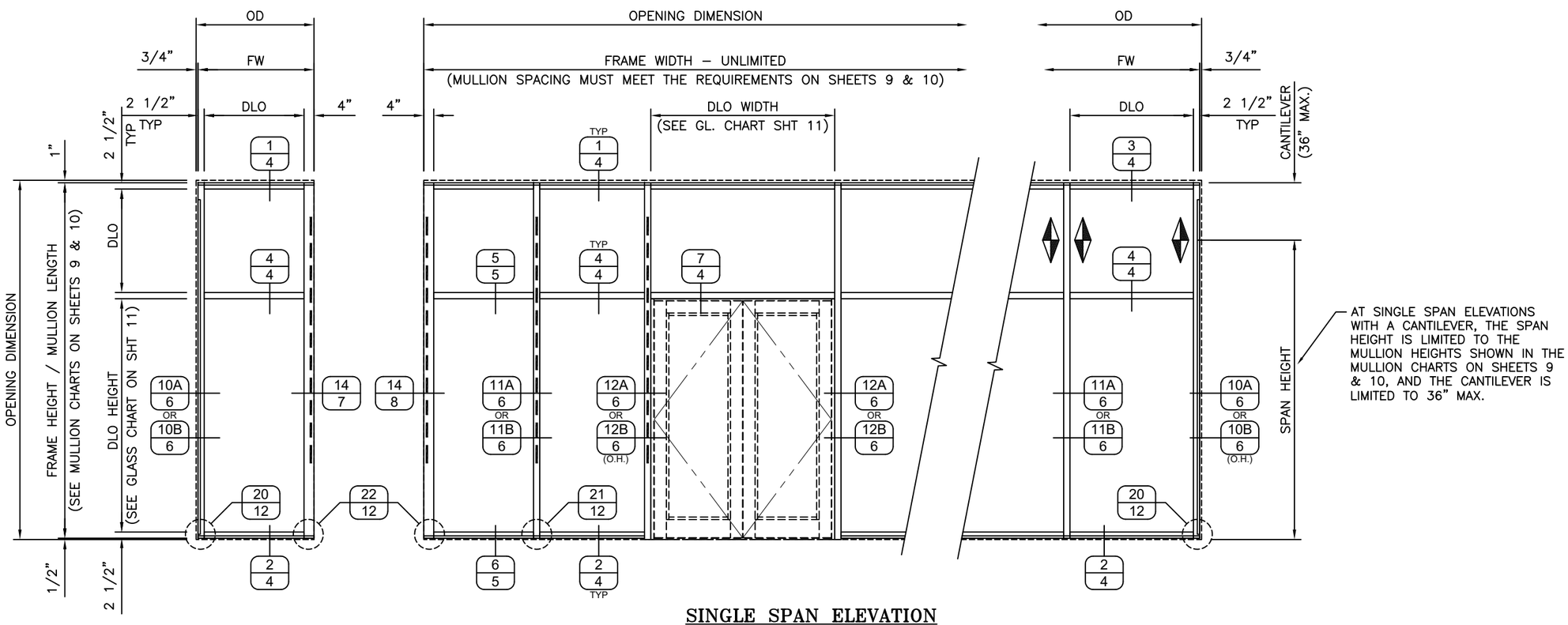

SINGLE SPAN ELEVATION
(NOT TO SCALE)

REV.#	DATE	PRINTS ISSUED FOR
–	10/18/26	CODE UPDATE
2	4/13/21	DRAFTING REVISION
1	10/12/20	1ST SUBMITTAL
–	–	–
–	–	–
–	–	–
–	–	–
–	–	–

KAWNEER
AN ARCONIC COMPANY
5555 WINDWARD PARKWAY, SUITE 220
ALPHARETTA, GA 30004
PH: (770) 449-5555
WWW.KAWNEER.COM

SCOTT WOLTERS LICENSE No 62354 STATE OF FLORIDA PROFESSIONAL ENGINEER
OCT 18, 2026

SEAL:

SCOTT WOLTERS
FL PE# 62354

WOLTERS ENGINEERING
(COA# 27194)
15211 97TH ROAD N
WEST PALM BEACH, FL 33412
PH/FAX:(561) 225-1982

PRODUCT:
CLEARWALL CURTAINWALL SYSTEM

DWG: CLRWL-IR

SECTION: 2

SHEET: 2/16

MULTI-SPAN ELEVATIONS

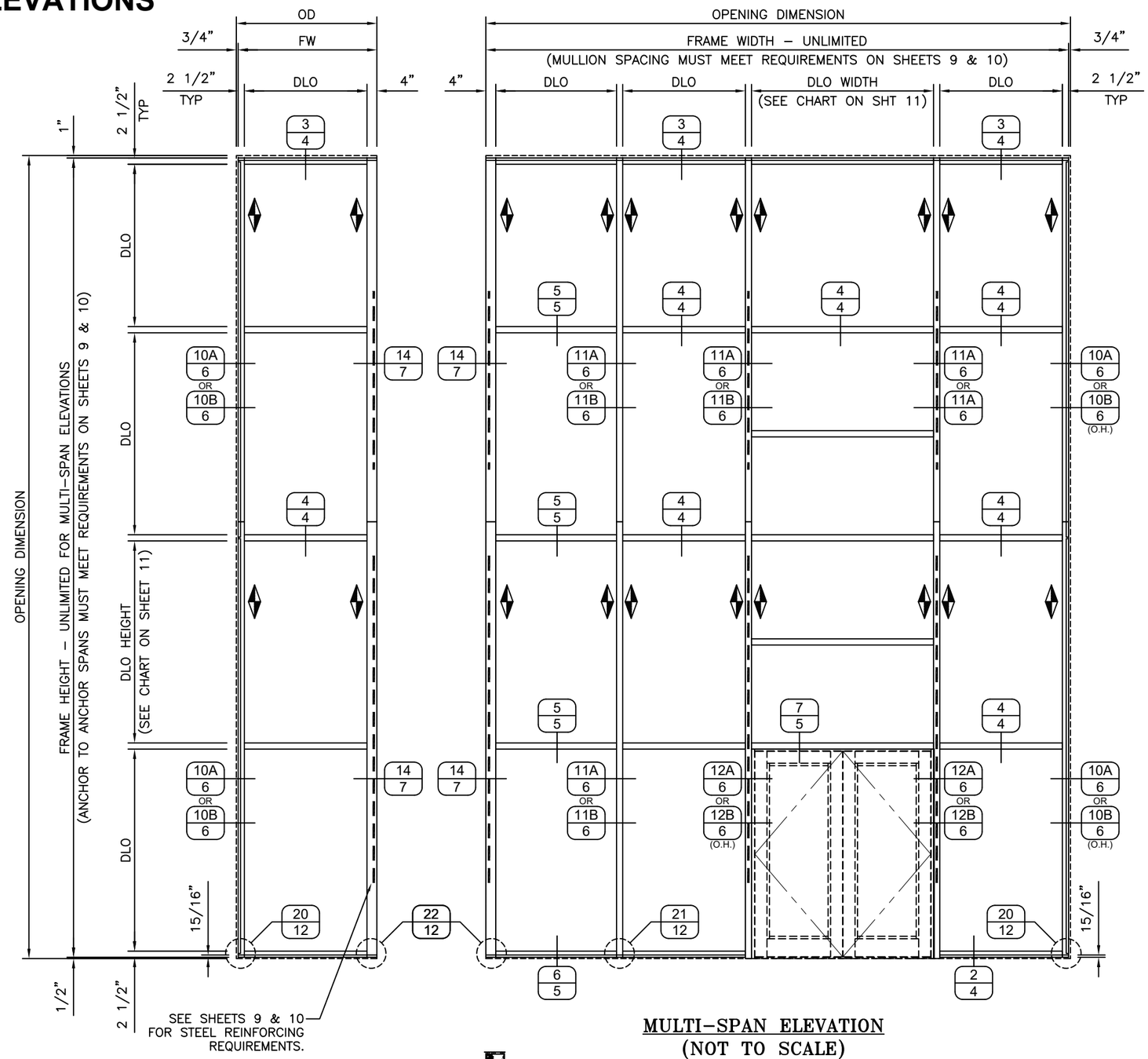

MULTI-SPAN ELEVATION
(NOT TO SCALE)

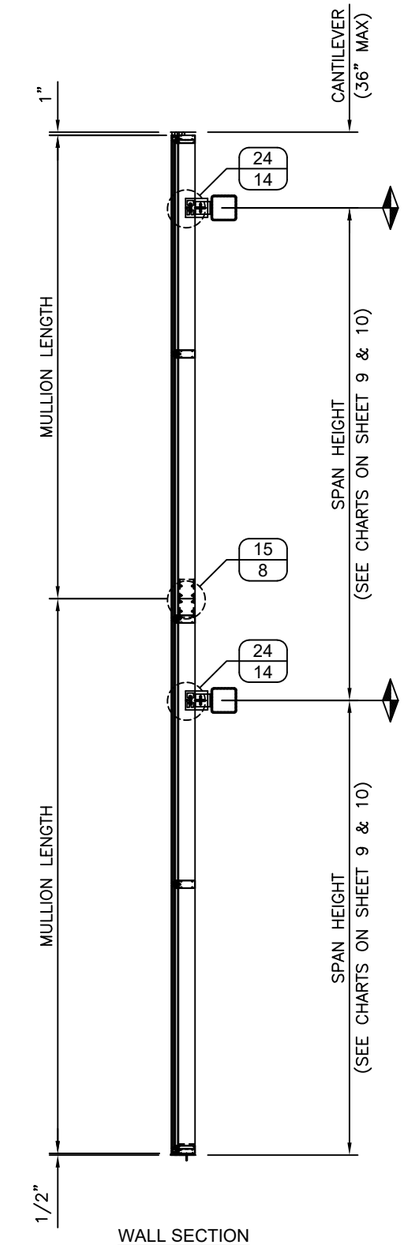

WALL SECTION

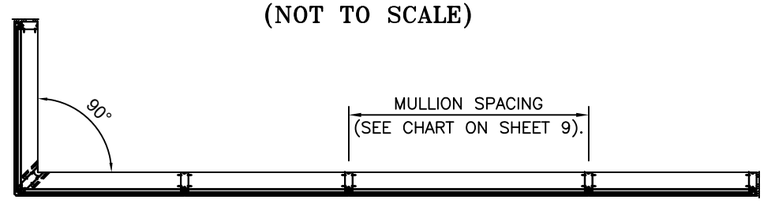

PLAN VIEW

REV.#	DATE	
–	10/18/26	CODE UPDATE
2	4/13/21	DRAFTING REVISION
1	10/12/20	1ST SUBMITTAL
–	–	PRINTS ISSUED FOR

KAWNEER
AN ARCONIC COMPANY
5555 WINDWARD PARKWAY, SUITE 220
ALPHARETTA, GA 30004
PH: (770) 449-5555
WWW.KAWNEER.COM

SEAL:

SCOTT WOLTERS
FL PE# 62354

WOLTERS ENGINEERING
(COA# 27194)
15211 97TH ROAD N
WEST PALM BEACH, FL 33412
PH/FAX:(561) 225-1982

PRODUCT: CLEARWALL CURTAINWALL SYSTEM

DWG: CLRWL-IR

SECTION: 2

SHEET: 3/16

HEAD/SILL/HORIZONTAL DETAILS

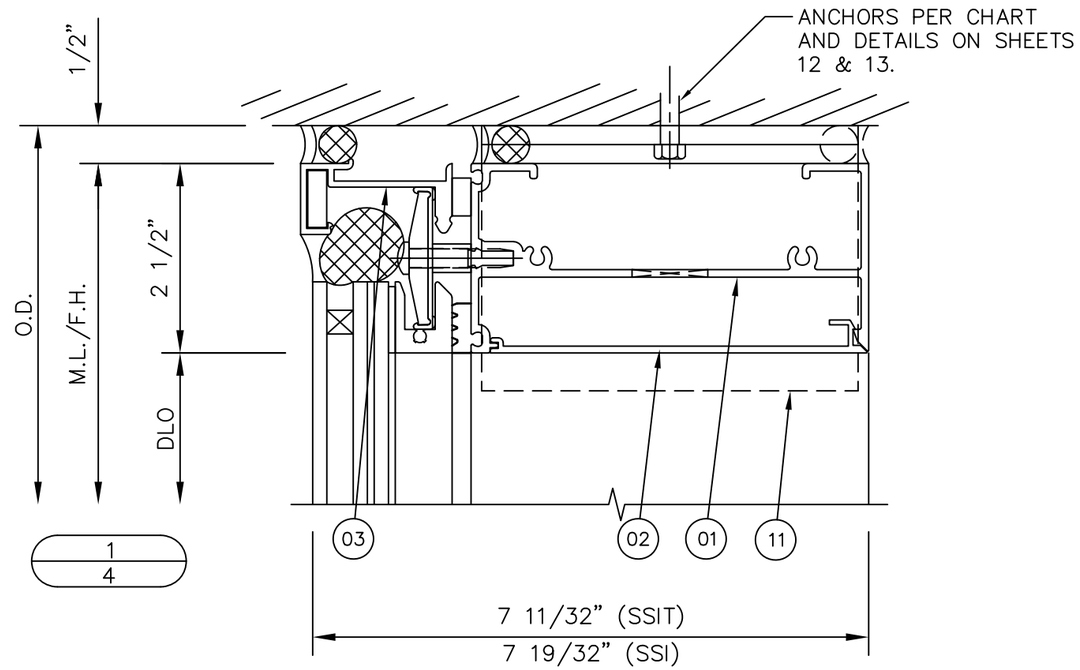

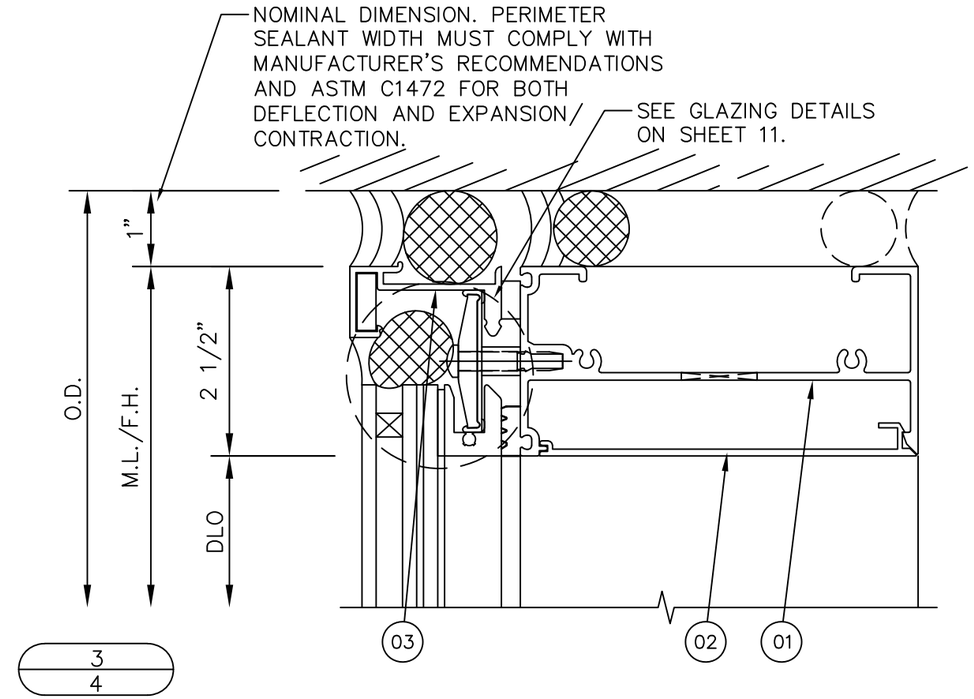

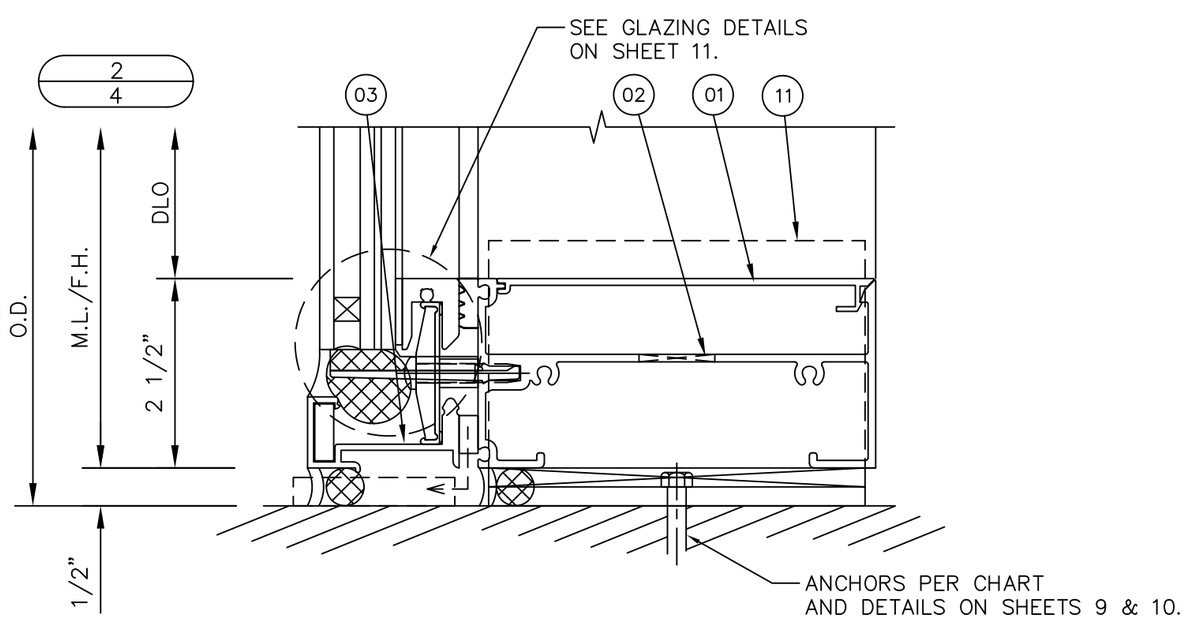

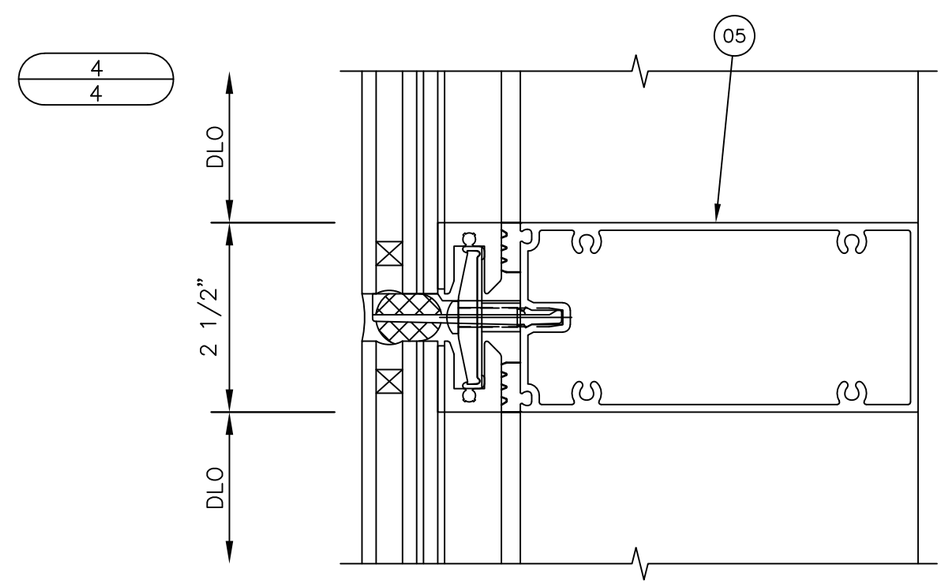

REV.#	DATE	
–	10/18/26	CODE UPDATE
2	4/13/21	DRAFTING REVISION
1	10/12/20	1ST SUBMITTAL
–	–	PRINTS ISSUED FOR

KAWNEER
AN ARCONIC COMPANY
5555 WINDWARD PARKWAY, SUITE 220
ALPHARETTA, GA 30004
PH: (770) 449-5555
WWW.KAWNEER.COM

SEAL:

SCOTT WOLTERS
FL PE# 62354

WOLTERS ENGINEERING
(COA# 27194)
15211 97TH ROAD N
WEST PALM BEACH, FL 33412
PH/FAX:(561) 225-1982

PRODUCT: CLEARWALL CURTAINWALL SYSTEM

DWG: CLRWL-IR

SECTION: 3

SHEET: 4/16

HEAD/SILL/HORIZONTAL DETAILS

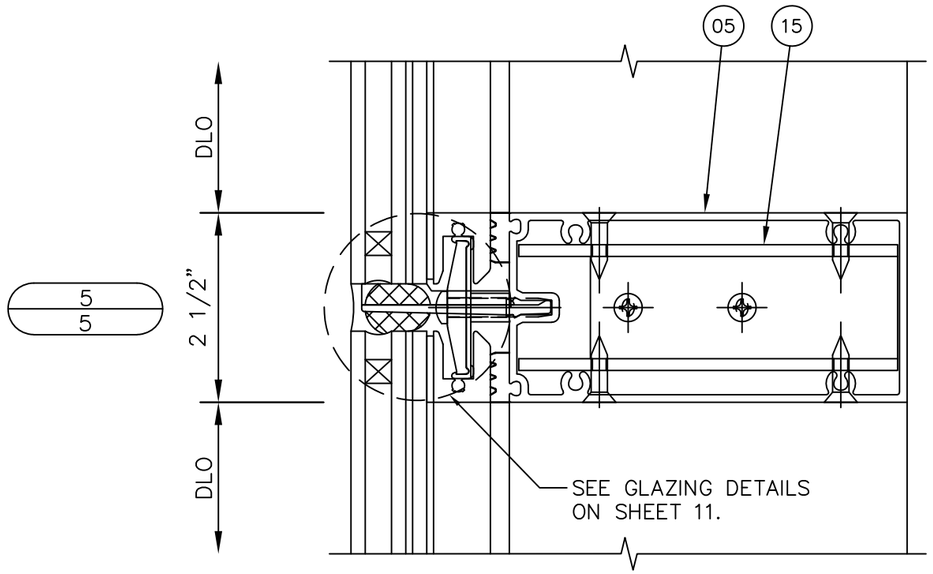

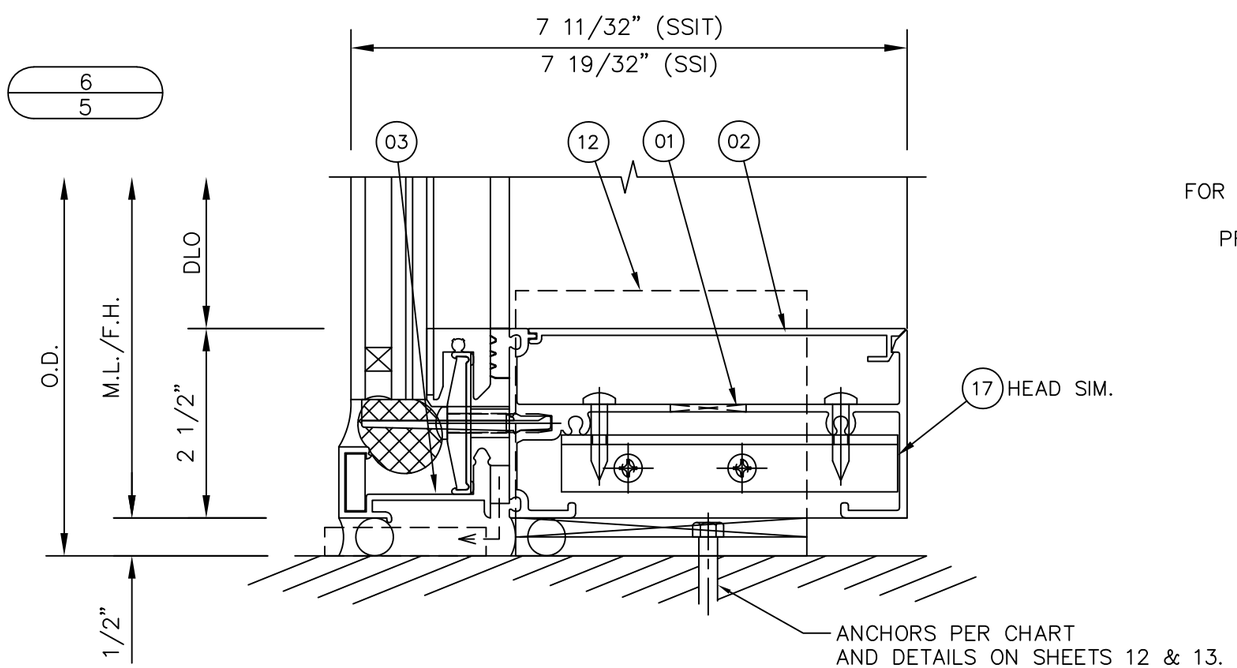

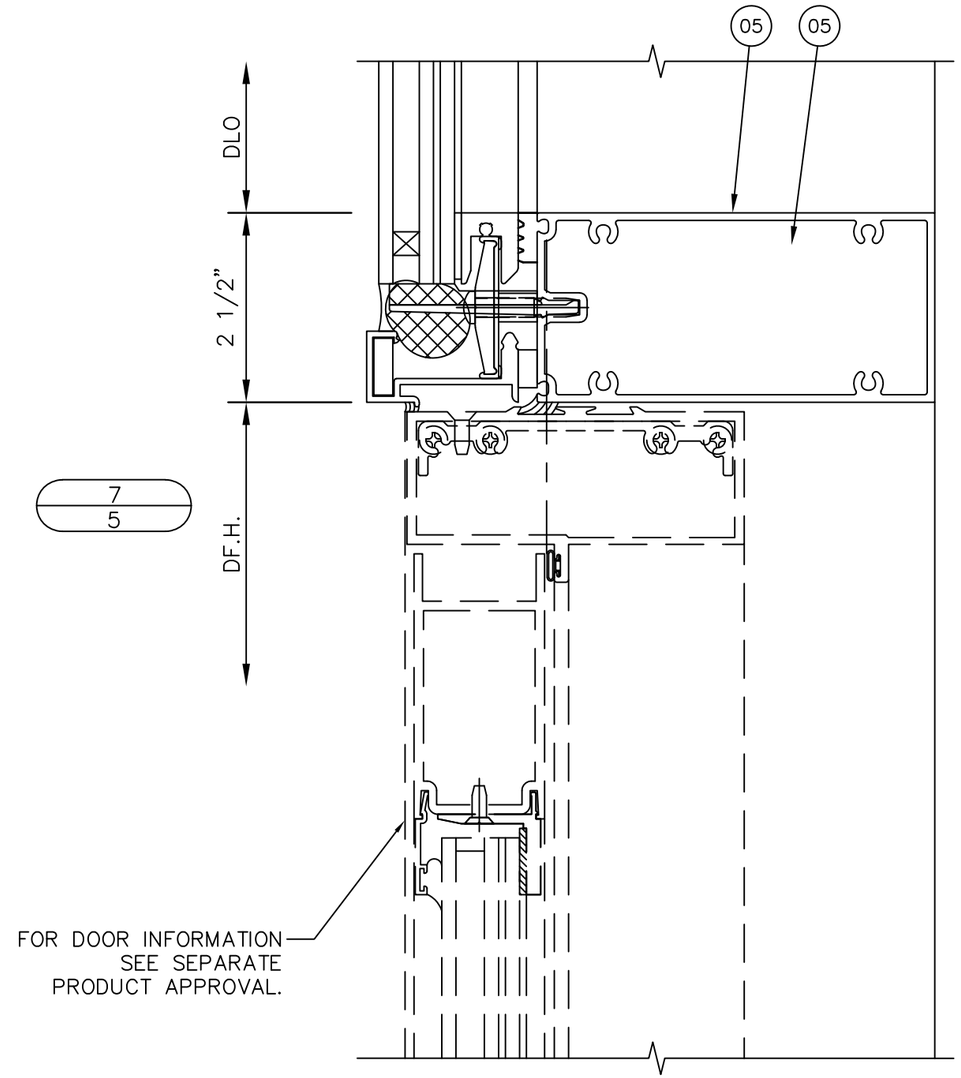

REV.#	DATE	
–	10/18/26	CODE UPDATE
2	4/13/21	DRAFTING REVISION
1	10/12/20	1ST SUBMITTAL
–		PRINTS ISSUED FOR

KAWNEER
AN ARCONIC COMPANY
5555 WINDWARD PARKWAY, SUITE 220
ALPHARETTA, GA 30004
PH: (770) 449-5555
WWW.KAWNEER.COM

SEAL:

SCOTT WOLTERS
FL PE# 62354

WOLTERS ENGINEERING
(COA# 27194)
15211 97TH ROAD N
WEST PALM BEACH, FL 33412
PH/FAX:(561) 225-1982

PRODUCT: CLEARWALL CURTAINWALL SYSTEM

DWG: CLRWL-IR

SECTION: 3

SHEET: 5/16

JAMB/MULLION DETAILS

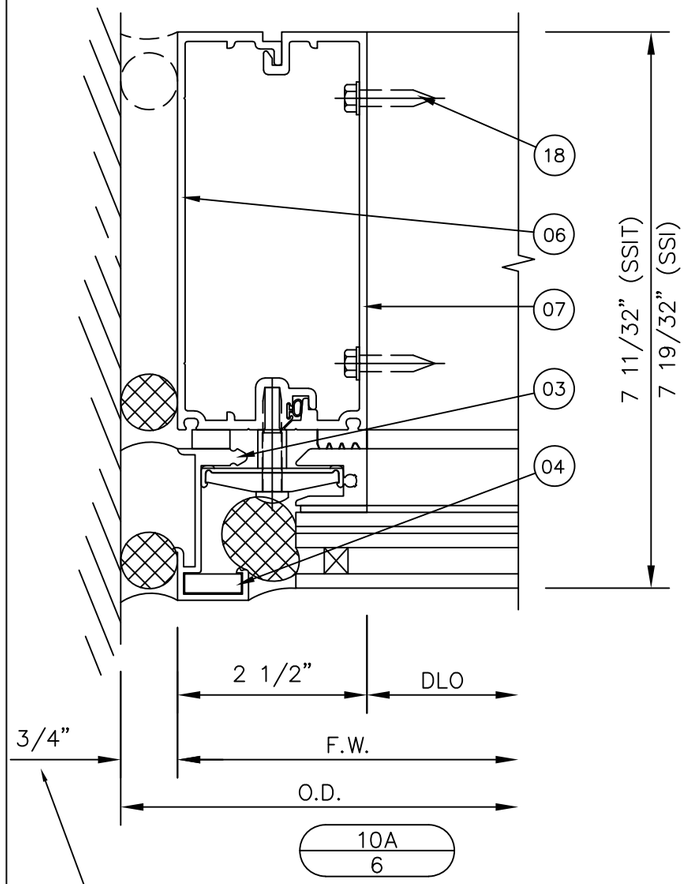

NOMINAL DIMENSION. PERIMETER SEALANT WIDTH MUST COMPLY WITH MANUFACTURER'S RECOMMENDATIONS AND ASTM C1472.

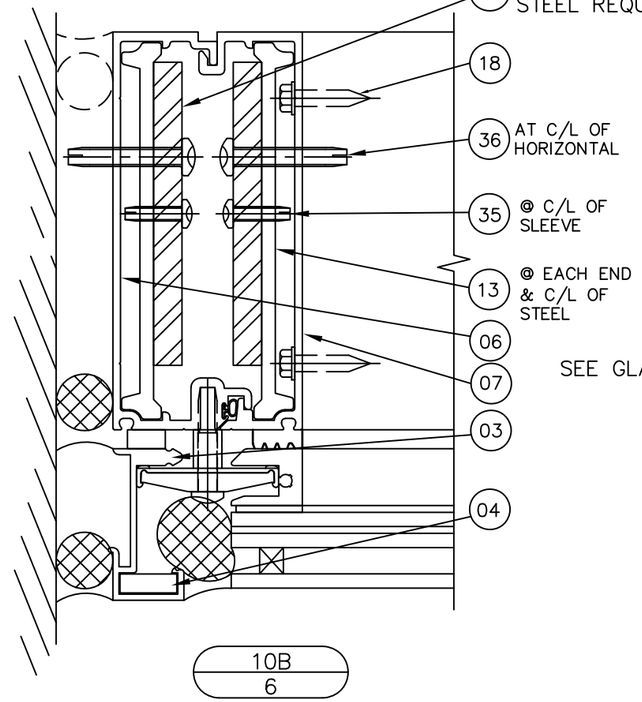

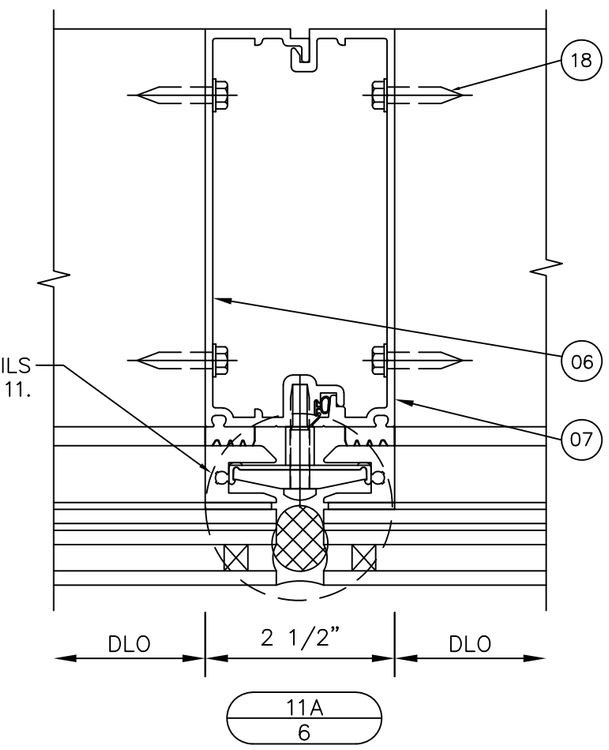

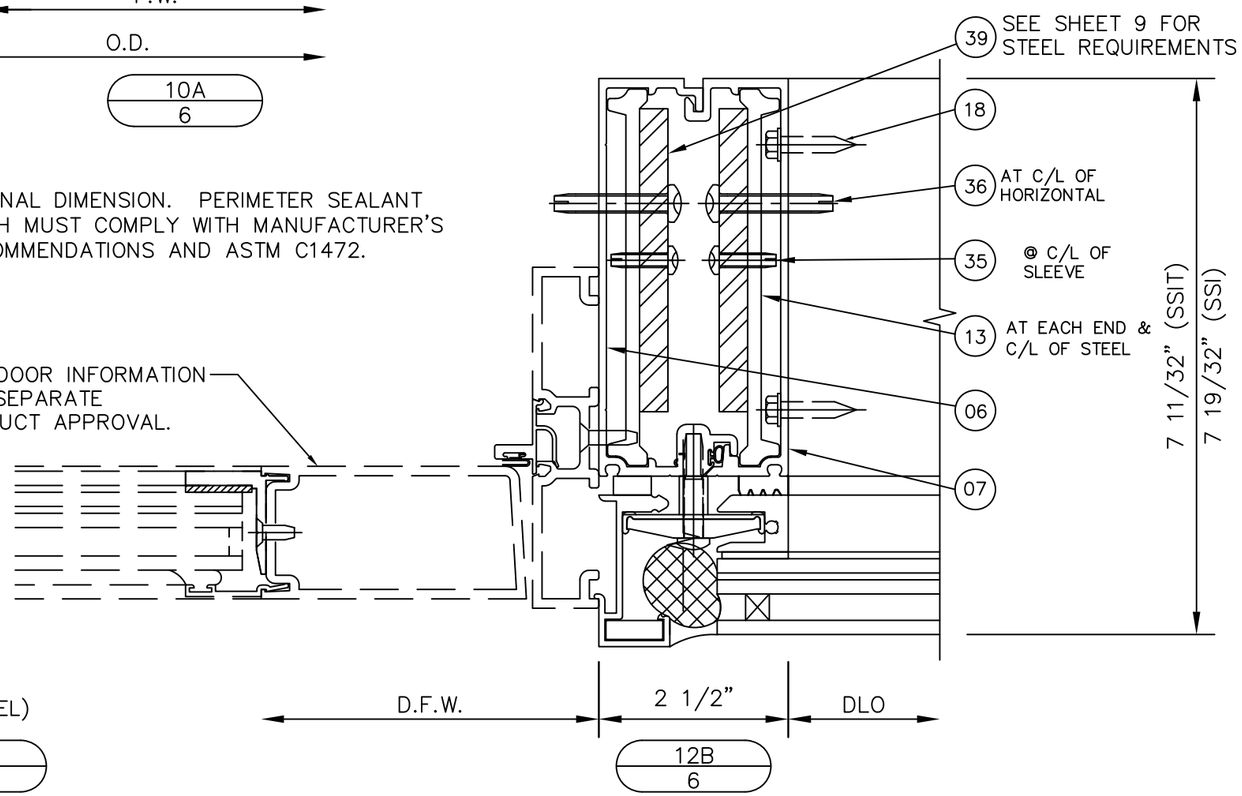

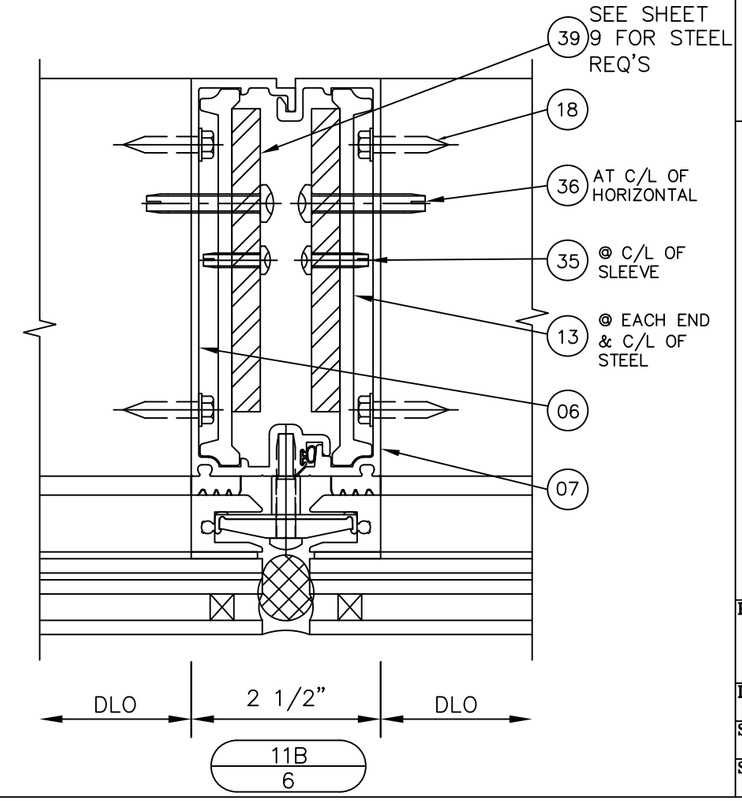

REV.#	DATE	
–	10/18/26	CODE UPDATE
2	4/13/21	DRAFTING REVISION
1	10/12/20	1ST SUBMITTAL
–		PRINTS ISSUED FOR

KAWNEER
AN ARCONIC COMPANY
5555 WINDWARD PARKWAY, SUITE 220
ALPHARETTA, GA 30004
PH: (770) 449-5555
WWW.KAWNEER.COM

SEAL:

SCOTT WOLTERS
FL PE# 62354

WOLTERS ENGINEERING
(COA# 27194)
15211 97TH ROAD N
WEST PALM BEACH, FL 33412
PH/FAX:(561) 225-1982

PRODUCT: CLEARWALL CURTAINWALL SYSTEM

DWG: CLRWL-IR

SECTION: 3

SHEET: 6/16

CORNER DETAILS

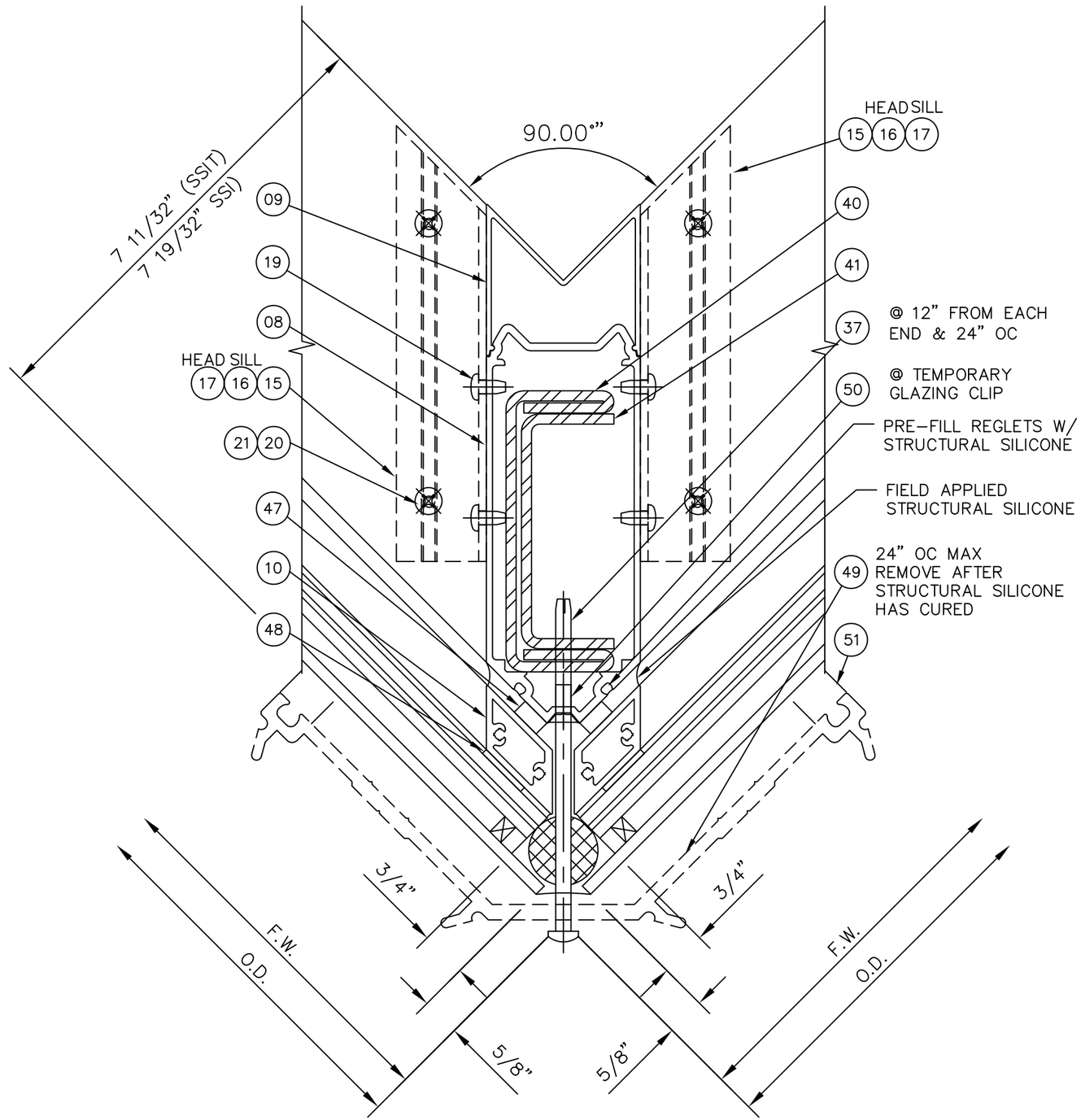

14
7

REV.#	DATE	PRINTS ISSUED FOR
–	10/18/26	CODE UPDATE
2	4/13/21	DRAFTING REVISION
1	10/12/20	1ST SUBMITTAL
–		
–		
–		
–		
–		

KAWNEER
AN ARCONIC COMPANY
5555 WINDWARD PARKWAY, SUITE 220
ALPHARETTA, GA 30004
PH: (770) 449-5555
WWW.KAWNEER.COM

SEAL:

SCOTT WOLTERS
FL PE# 62354

WOLTERS ENGINEERING
(COA# 27194)
15211 97TH ROAD N
WEST PALM BEACH, FL 33412
PH/FAX:(561) 225-1982

PRODUCT: CLEARWALL CURTAINWALL SYSTEM

DWG: CLRWL-IR

SECTION: 3

SHEET: 7/16

SPLICE DETAILS

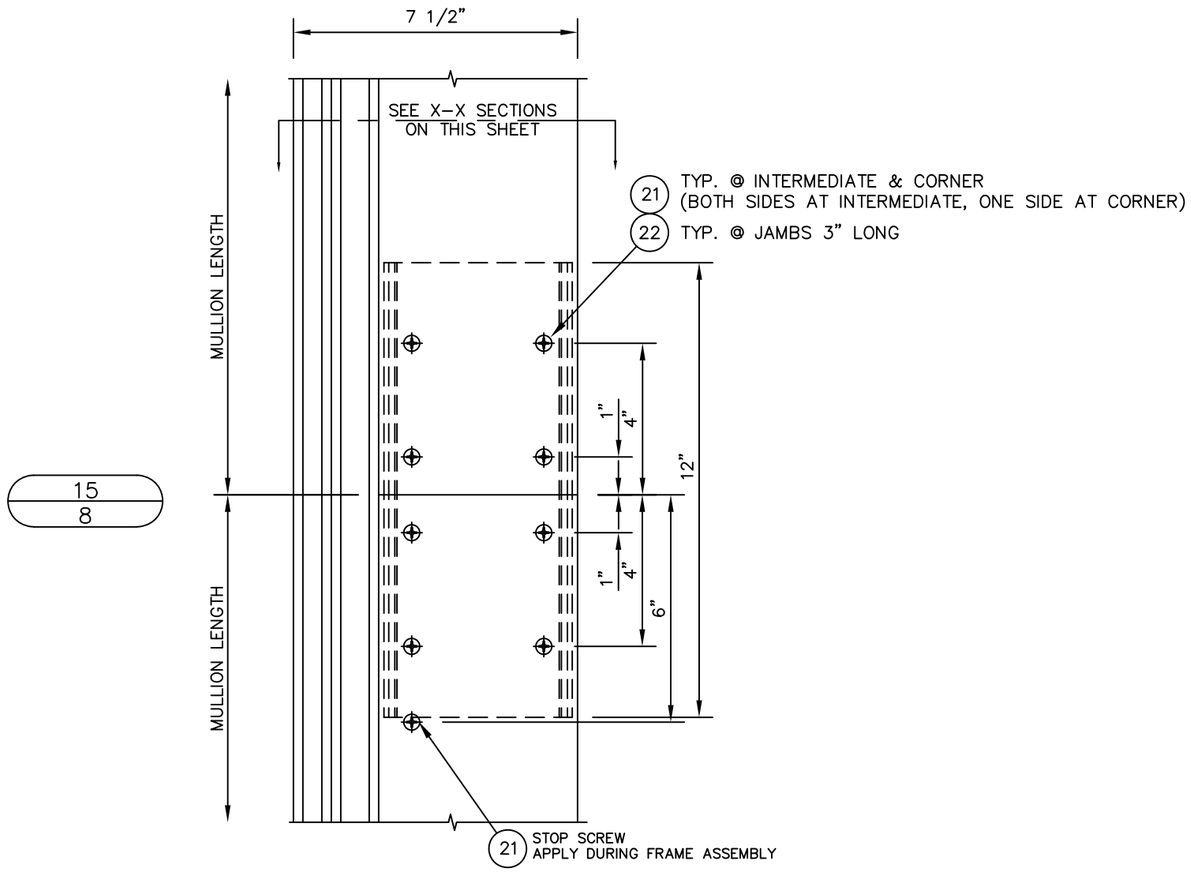

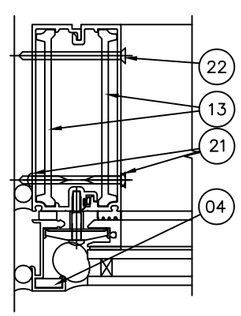

X–X
JAMB

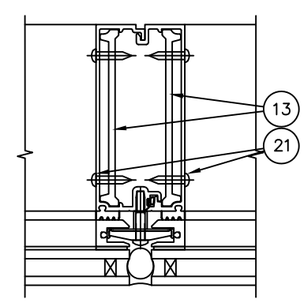

X–X
MULLION

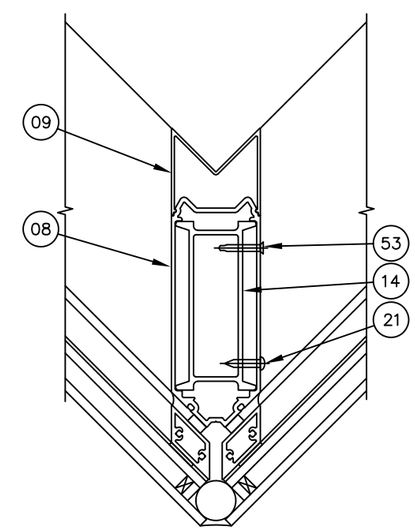

X–X
CORNER

REV.#	DATE	
–	10/18/26	CODE UPDATE
2	4/13/21	DRAFTING REVISION
1	10/12/20	1ST SUBMITTAL
–		PRINTS ISSUED FOR

KAWNEER
AN ARCONIC COMPANY
5555 WINDWARD PARKWAY, SUITE 220
ALPHARETTA, GA 30004
PH: (770) 449-5555
WWW.KAWNEER.COM

SEAL:

SCOTT WOLTERS
FL PE# 62354

WOLTERS ENGINEERING
(COA# 27194)
15211 97TH ROAD N
WEST PALM BEACH, FL 33412
PH/FAX:(561) 225-1982

PRODUCT: CLEARWALL CURTAINWALL SYSTEM

DWG: CLRWL-IR

SECTION: 3

SHEET: 8/16

MULLION LIMITATIONS

SINGLE SPAN JAMB CHART			
MULLION HEIGHT (in)	JAMB MULLION SPACING (in)	ALLOWABLE DESIGN PRESSURE (psf) NO REINF. (+/-)	ALLOWABLE DESIGN PRESSURE (psf) W/REINF. (+/-)
84	55	70	70
	64	60	60
	70	55	55
	76	50	50
	90	50	50
	100	-	50
96	48	70	70
	54	61	61
	60	56	56
	67	50	50
	79	50	50
	100	-	50
120	38 1/2	70	70
	42	64	64
	48	56	56
	54	50	50
	63 1/2	45	50
	100	-	50
132	28 1/2	70	70
	35	57	57
	44 1/2	50	50
	48	44	50
	54	39	50
	57 1/2	37	50
	100	-	50
144	30	52	52
	34	50	50
	42 1/2	50	50
	48	44	50
	60	35	50
	53	42	50
	100	-	50
156	48	50	50
	60	42	50
	70	35	50
	80	-	50
	94	-	43
168	39	50	50
	42	47	50
	48	41	50
	60	33	50
	66	30	50
	88	-	50

SINGLE SPAN NOTES:
1. STEEL REINFORCING LENGTH = MULLION HEIGHT−36".
2. JAMB DEFLECTION AND JAMB PERIMETER SEALANT MUST MEET MANUFACTURER'S RECOMMENDATIONS AND ASTM C1472.
3. COMPARATIVE ANALYSIS MAY BE USE FOR OTHER SIZES AND PRESSURES PER THE REQUIREMENTS OF FBC SECTION 2411.3.2.4.

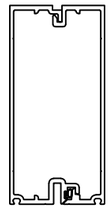

JAMB MULLION
NO STEEL REINFORCING

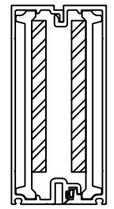

JAMB MULLION
WITH STEEL REINFORCING

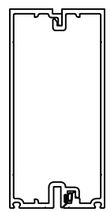

INTERMEDIATE MULLION
NO STEEL REINFORCING

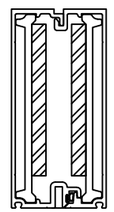

INTERMEDIATE MULLION
WITH STEEL REINFORCING

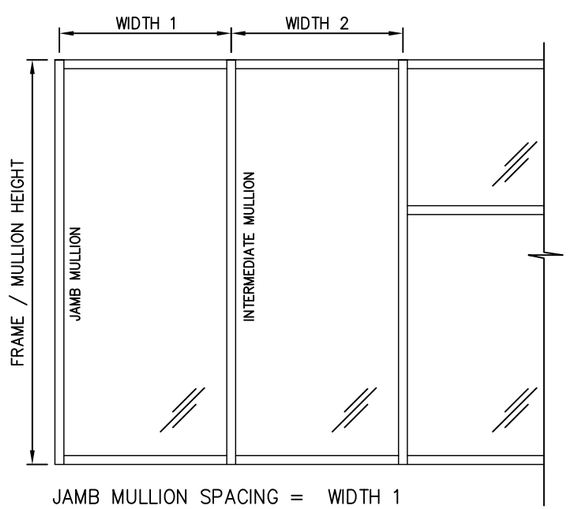

JAMB MULLION SPACING = WIDTH 1

INTERMEDIATE MULLION SPACING = $\frac{\text{WIDTH 1 + WIDTH 2}}{2}$

SINGLE SPAN MULLION CHART			
MULLION HEIGHT (in)	INTER. MULLION SPACING (in)	ALLOWABLE DESIGN PRESSURE (psf) NO REINF. (+/-)	ALLOWABLE DESIGN PRESSURE (psf) W/REINF. (+/-)
84	51	70	70
	60	59.5	59.5
	66	54	54
	70	50	50
	87	50	50
	96	-	50
96	45	70	70
	52	60	60
	60	52.5	52.5
	76	50	50
	96	-	50
120	36	70	70
	42	60	60
	48	52.5	52.5
	54	50	50
	61	45	50
	84	-	50
132	27	70	70
	32	59	59
	42	50	50
	48	43	50
	55	37	50
	76	-	50
144	24	60	60
	30	50	50
	36	44	50
	42	38	50
	50	31	50
	70	-	50
156	30	42	50
	36	35	50
	46	30	50
	55	-	50
	60	-	46
168	30	33	50
	33	30	50
	44	-	50
	60	-	36

SINGLE SPAN NOTES:
1. STEEL REINFORCING LENGTH = MULLION HEIGHT−36".
2. COMPARATIVE ANALYSIS MAY BE USE FOR OTHER SIZES AND PRESSURES PER THE REQUIREMENTS OF FBC SECTION 2411.3.2.4.

MULTI-SPAN JAMB/MULLION CHART			
JAMB/ MULLION HEIGHT (in)	JAMB/ MULLION SPACING (in)	ALLOWABLE DESIGN PRESSURE (psf) NO REINF. (+/-)	ALLOWABLE DESIGN PRESSURE (psf) W/REINF. (+/-)
84	74	50	50
	87	-	50
	100	-	50
96	65	50	50
	84	-	50
	91	-	50
120	52	50	50
	60	-	50
	72	-	50
132	36	50	59
	42	47	50
	47	42	50
	54	-	50
	66	-	50
144	30	50	50
	36	42	50
	43	35	50
	48	-	50
	60	-	50
156	24	49	50
	30	39	50
	36	33	50
	40	30	50
	48	-	50
	56	-	50
168	24	39	50
	30	32	50
	36	26	50
	52	-	50

MULTI−SPAN NOTES:
1. PRESSURES LISTED ABOVE APPLY TO MULLIONS WITH EQUAL SPAN HEIGHTS.
2. SEE NOTES BELOW FOR UNEQUAL SPANS.
3. STEEL REINFORCING REQUIREMENTS:
   a. LENGTH FOR BOTTOM SPAN REINFORCING = M.L.−36", STARTING 30" FROM SILL (EXTENDS THRU 1ST MID−SPAN ANCHOR)
   b. LENGTH FOR REINFORCING IN UPPER SPANS = SPAN HEIGHT−84" (MIN), LOCATED 35" ABOVE LOWER STEEL OR CENTERED IN SPAN.
   c. ANY LOCATION WHERE THE MULLION BENDING MOMENT EXCEEDS 30,230 in−lb.
4. COMPARATIVE ANALYSIS MAY BE USE FOR OTHER SIZES AND PRESSURES PER THE REQUIREMENTS OF FBC SECTION 2411.3.2.4.

UN−EQUAL SPANS:

MULLIONS WITH UN−EQUAL SPAN HEIGHTS MUST MEET ALL OF THE FOLLOWING REQUIREMENTS:
1. MAX. SPAN HEIGHT = 168 in.
2. MAX. DESIGN PRESSURE = ±50 psf
3. MAX. BENDING MOMENT FOR MULLION WITH NO STEEL REINFORCING = 30,230 in−lb.
4. MAX. BENDING MOMENT FOR REINFORCED MULLION = 47,426 in−lb.
5. MAX. MID−SPAN ANCHOR REACTION = 3754 lb.

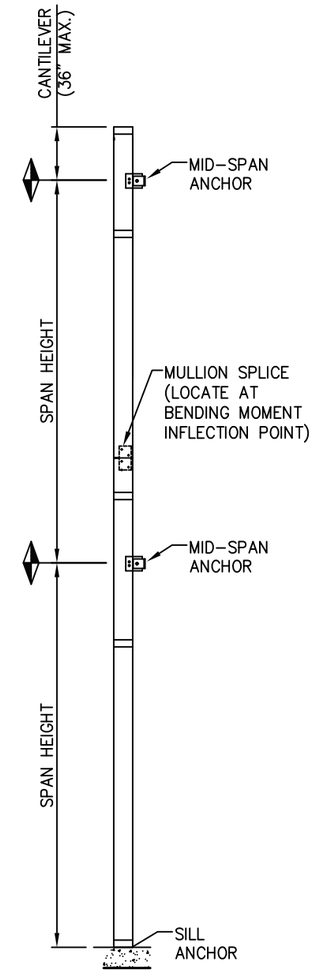

TWIN OR MULTI−SPAN
WALL SECTION

REV.#	DATE	
2	10/18/26	CODE UPDATE
1	4/13/21	DRAFTING REVISION
–	10/12/20	1ST SUBMITTAL
		PRINTS ISSUED FOR

KAWNEER
AN ARCONIC COMPANY
5555 WINDWARD PARKWAY, SUITE 220
ALPHARETTA, GA 30004
PH: (770) 449−5555
WWW.KAWNEER.COM

SEAL:

SCOTT WOLTERS, LICENSE, No 62354, STATE OF FLORIDA, PROFESSIONAL ENGINEER
OCT 18, 2026

SCOTT WOLTERS
FL PE# 62354

WOLTERS ENGINEERING
(COA# 27194)
15211 97TH ROAD N
WEST PALM BEACH, FL 33412
PH/FAX:(561) 225−1982

PRODUCT: CLEARWALL CURTAINWALL SYSTEM

DWG: CLRWL−IR

SECTION: 4

SHEET: 9/16

CORNER DETAILS

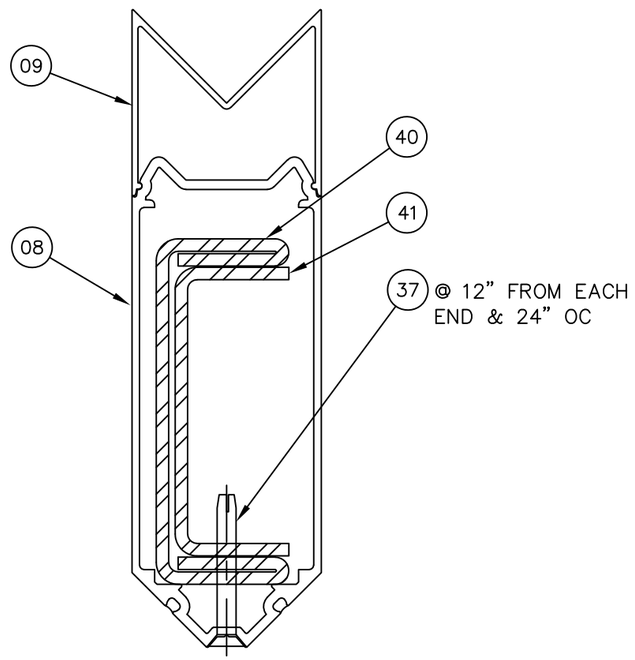

CORNER MULLION CHART			
MULLION HEIGHT (in)	CORNER MULLION LOAD WIDTH (in)	ALLOWABLE DESIGN PRESSURE (psf) SINGLE SPAN (+/-)	ALLOWABLE DESIGN PRESSURE (psf) MULTI-SPAN (+/-)
96	42	50	50
	48	50	50
	51	50	50
120	42	50	50
	48	50	50
	51	50	50
132	42	50	50
	48	50	50
	51	47	50
144	36	50	50
	42	48	50
	46	44	50
156	30	50	50
	36	48	50
	40	43	50
	43	40	46
168	24	50	50
	30	41	50
	36	34	50
	40 1/8	30	50

CORNER MULLION NOTES:

1. WIDTHS ARE BASED ON PROJECTED AREA. (CENTER OF DLO TO CENTER OF DLO)
2. PRESSURES FOR MULTI-SPAN MULLIONS LISTED ABOVE APPLY TO MULLIONS WITH EQUAL SPAN HEIGHTS. SEE NOTES BELOW FOR UNEQUAL SPANS.
3. STEEL REINFORCING LENGTH FOR SINGLE SPAN MULLIONS = MULLION LENGTH-36".
4. MULTI-SPAN STEEL REINFORCING REQUIREMENTS:
   a. LENGTH FOR BOTTOM SPAN REINFORCING = M.L.-36", STARTING 30" FROM SILL (EXTENDS THRU 1ST MID-SPAN ANCHOR)
   b. LENGTH FOR REINFORCING IN UPPER SPANS = SPAN HEIGHT-84" (MIN), 35" ABOVE LOWER STEEL OR CENTERED IN SPAN.
   c. ANY LOCATION WHERE THE MULLION BENDING MOMENT EXCEEDS 22,317 in-lb.
4. COMPARATIVE ANALYSIS MAY BE USE FOR OTHER SIZES AND PRESSURES PER THE REQUIREMENTS OF FBC SECTION 2411.3.2.4.

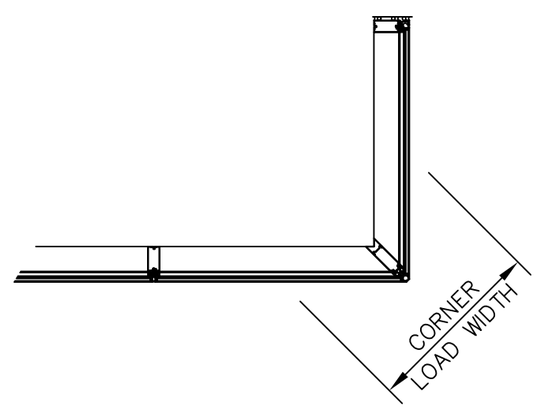

UN-EQUAL SPANS:

CORNER MULLIONS WITH UN-EQUAL SPAN HEIGHTS MUST MEET ALL OF THE FOLLOWING REQUIREMENTS:

1. MAX. SPAN HEIGHT = 168 in.
2. MAX. DESIGN PRESSURE = ±50 psf
3. MAX. BENDING MOMENT FOR MULLION WITH NO STEEL REINFORCING = 22,317 in-lb.
4. MAX. BENDING MOMENT FOR REINFORCED MULLION = 36,500 in-lb.
5. MAX. MID-SPAN ANCHOR REACTION = 2751 lb.

REV.#	DATE	
–	10/18/26	CODE UPDATE
2	4/13/21	DRAFTING REVISION
1	10/12/20	1ST SUBMITTAL
–		PRINTS ISSUED FOR

KAWNEER
AN ARCONIC COMPANY
5555 WINDWARD PARKWAY, SUITE 220
ALPHARETTA, GA 30004
PH: (770) 449-5555
WWW.KAWNEER.COM

SEAL:

SCOTT WOLTERS LICENSED No 62354 STATE OF FLORIDA PROFESSIONAL ENGINEER
OCT 18, 2026

SCOTT WOLTERS
FL PE# 62354

WOLTERS ENGINEERING
(COA# 27194)
15211 97TH ROAD N
WEST PALM BEACH, FL 33412
PH/FAX:(561) 225-1982

PRODUCT: CLEARWALL CURTAINWALL SYSTEM

DWG: CLRWL-IR

SECTION: 4

SHEET: 10/16

SSI GLAZING DETAILS

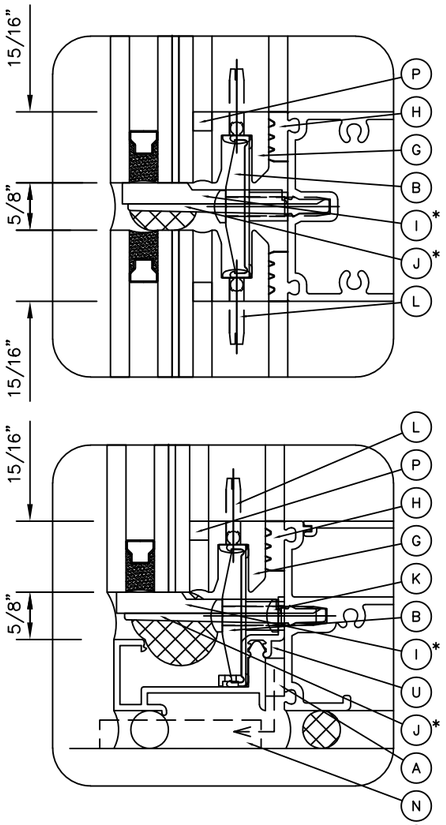

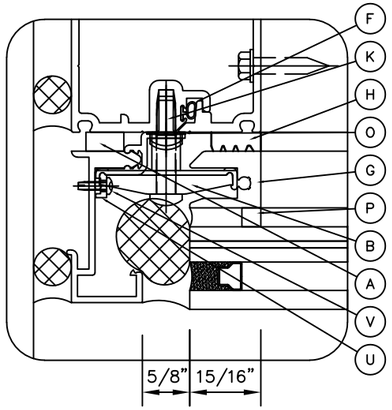

SSIT GLAZING DETAILS

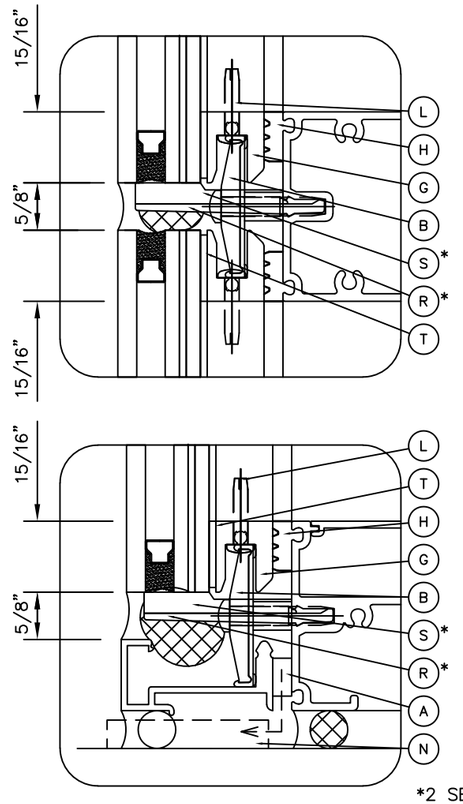

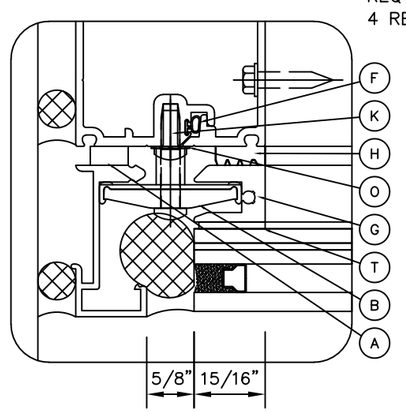

*2 SETTING BLOCKS AND CHAIRS REQ'D FOR GLASS ≤ 32 ft².
4 REQ'D FOR GLASS > 32ft².

A	127159	SSG TAPE (SHORE "A" 30 DUROMETER POLYURETHANE FOAM)
B	172213	TOGGLE ASSEMBLY (SEE LOCATIONS ON SHEET 13)
F	027493	AIR SEAL (ARLOC T–BULB WEATHER STRIP)
G	172021	INTERFACE
H	127167	INTERIOR FIXED GASKET (SHORE "OO" 70±10 DUROMETER EPDM SPONGE)
I	127166	SETTING BLOCK (SHORE "A" 85±5 DUROMETER SILICONE). (2) PER LITE MIN.
J	172210	SSI GLASS CHAIR
K	128958	1/4" x 1/2" PHTF TYPE "B" W/ #12 SQUARE RECESS HEAD 300 STAINLESS STEEL 36" O.C.
L	977104	10–24 x 7/8" TYPE 1 PHTC CROSS RECESSED TYPE "D" 300 STAINLESS STEEL
N		3/8" DIA.WEEP TUBE BY OTHERS
O	028416	1/4" STAR WASHER
P	127095	1/4"x1/4" GLAZING TAPE
R	172216	SSIT GLASS CHAIR
S	127163	SETTING BLOCK (SHORE "A" 85±5 DUROMETER SILICONE). (2) PER LITE MIN.
T		3M VHB 7/8" TAPE (B23F BLACK OR G23F GRAY) BY OTHERS
U	172214	PERIMETER TRIM CLIP – @ EACH END OF PERIM TRIM & ℄ OF HORIZONTAL MULLION
V	128920	#6x3/8" TYPE 1 PHTF SCREW TYPE "B" CROSS RECESS HEAD (300 SS). (1) NEAR ℄ OF PERIMETER TRIM

GLASS TYPES

GLASS TYPE 1 – 1" INSULATED LAMINATED
LARGE AND SMALL MISSILE IMPACT RESISTANT

MAKE–UP: 1/4" TEMPERED
3/8" AIR SPACE WITH ALUM. SPACER (BLACK)
3/16" HEAT STRENGTHENED
0.090" SENTRYGLAS INTERLAYER
3/16" HEAT STRENGTHENED

GLASS TYPE 2 – 1" INSULATED LAMINATED
SMALL MISSILE IMPACT RESISTANT ONLY

MAKE–UP: 1/4" TEMPERED
3/8" AIR SPACE WITH ALUM. SPACER (BLACK)
3/16" HEAT STRENGTHENED
0.060" PVB INTERLAYER
3/16" HEAT STRENGTHENED

GLASS TYPE 1 (LMI/SMI) - SSI GLAZING OPTION

TESTED DLO'S = 49 1/2"x93 1/2" (50 psf), 33 1/2"x93" (70 psf) — MAX. SILICONE STRESS=20psi

ALLOWABLE DESIGN PRESSURE (psf)

HEIGHT (in)	WIDTH (in) 30	33 1/2	36	42	48	49 1/2	54	60	66	75	78	84
54	70	70	70	70	70	70	70	50	50	50	50	49
60	70	70	70	70	66	66	50	50	50	50		
64	70	70	70	68	64	50	50	50	50			
74	70	70	70	64	50	50	50	50				
84	70	70	64	50	50	50	49					
93	70	70	50	50	50	50						
93 1/2	70	50	50	50	50	50						
96	70	50	50	50	50							
108	50	50	50	50								
126	50	50	50									
138	50	50										
144	50											

GLASS TYPE 1 (LMI/SMI) - SSIT GLAZING OPTION

TESTED DLO'S = 49 1/2"x93 1/2" (50 psf), 33 1/2"x93" (70 psf) — MAX. 3M TAPE STRESS=12psi

ALLOWABLE DESIGN PRESSURE (psf)

HEIGHT (in)	WIDTH (in) 30	33 1/2	36	42	48	49 1/2	54	60	66	75	78	84
54	70	70	70	70	63	61	56	50	50	50	50	49
60	70	70	70	70	63	61	50	50	50	50		
64	70	70	70	68	63	50	50	50	47			
74	70	70	70	64	50	50	50	50				
84	70	70	64	50	50	50	49					
93	70	70	50	50	50	50						
93 1/2	70	50	50	50	50	50						
96	70	50	50	50	50							
108	50	50	50	50								
126	50	50	50									
138	50	50										
144	50											

GLASS TYPE 2 (SMI ONLY) - SSI or SSIT GLAZING OPTIONS

TESTED DLO'S = 49 1/2"x93 1/2" (50 psf)

ALLOWABLE DESIGN PRESSURE (psf)

HEIGHT (in)	WIDTH (in) 30	33 1/2	36	42	48	49 1/2	54	60	66	75	78	84
54	50	50	50	50	50	50	50	50	50	50	50	49
60	50	50	50	50	50	50	50	50	50	50		
64	50	50	50	50	50	50	50	50	47			
74	50	50	50	50	50	50	50	50				
84	50	50	50	50	50	50	49					
93 1/2	50	50	50	50	50	50						
96	50	50	50	50	50							
108	50	50	50	50								
126	50	50	50									
138	50	50										
144	50											

GLASS CHART NOTES:
1. DIMENSIONS LISTED ARE DLO DIMENSIONS.
2. PRESSURES SHOWN ARE ROUNDED TO WHOLE NUMBERS.
3. COMPARATIVE ANALYSIS MAY BE USED FOR OTHER SIZES AND PRESSURES PER THE REQUIREMENTS OF FBC SECTION 2411.3.2.4.

REV.#	DATE	
–	10/18/26	CODE UPDATE
1	4/13/21	DRAFTING REVISION
–	10/12/20	1ST SUBMITTAL
REV.#	DATE	PRINTS ISSUED FOR

KAWNEER
AN ARCONIC COMPANY
5555 WINDWARD PARKWAY, SUITE 220
ALPHARETTA, GA 30004
PH: (770) 449–5555
WWW.KAWNEER.COM

SEAL:

SCOTT WOLTERS LICENSE No 62354 STATE OF FLORIDA PROFESSIONAL ENGINEER
OCT 18, 2026

SCOTT WOLTERS
FL PE# 62354

WOLTERS ENGINEERING
(COA# 27194)
15211 97TH ROAD N
WEST PALM BEACH, FL 33412
PH/FAX:(561) 225–1982

PRODUCT: CLEARWALL CURTAINWALL SYSTEM

DWG: CLRWL–IR

SECTION: 5

SHEET: 11/16

HEAD/SILL ANCHOR DETAILS

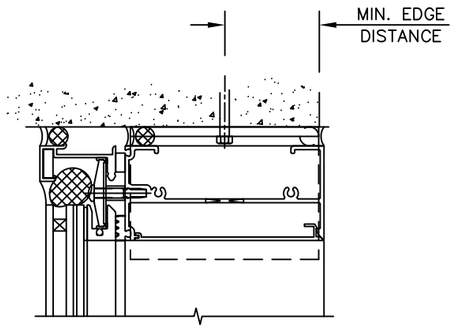

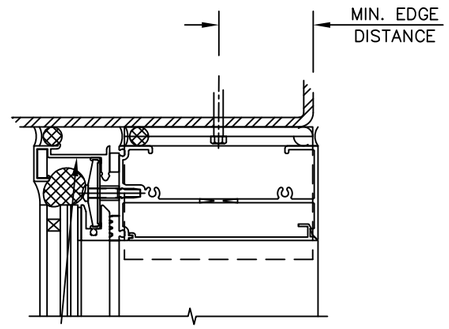

HEAD/SILL ANCHOR SCHEDULE			
BASE MATERIAL	FASTENER TYPE	EMBEDMENT (MIN)	EDGE DISTANCE (MIN)
CONCRETE (3000 psi MIN)	1/4" DIA. DEWALT ULTRACON+ 1/4" DIA. ELCO CRETE-FLEX SS4 1/4" DIA. ELCO AGGRE-GATOR 1/4" DIA. HILTI KWIK-CON II+	1 3/4"	2 1/2"
STEEL (1/8", 36 ksi MIN.)	1/4" DIA. ITW TEKS SCREW[2] 1/4" DIA. ELCO BI-FLEX 1/4" DIA. ELCO DRIL-FLEX 1/4" DIA. F-TYPE THREAD FORMING SCREW[3] (SAE Gr. 5 MIN)	FULL[1]	3/4"

1. FASTENER THREADS MUST FULLY PENETRATE THE WALL THICKNESS OF THE STEEL, WITH 3 ADDITIONAL THREADS BEYOND, FOR FULL EMBEDMENT.
2. CLIMASEAL ACR COATING IS REQUIRED WITHIN 3000 ft. OF A SALTWATER COASTLINE.
3. WITHIN 3000 ft OF A SALTWATER COASTLINE, F-TYPE SCREWS MUST BE EITHER GLAVANIZED PER ASTM A153 CLASS D, PER ASTM A641 CLASS 3S, COATED TO EXHIBIT <5% RED RUST AFTER 1,000 HOURS OF EXPOSURE PER ASTM B117, OR 300 SERIES STAINLESS STEEL (F_{UT}=100ksi min)

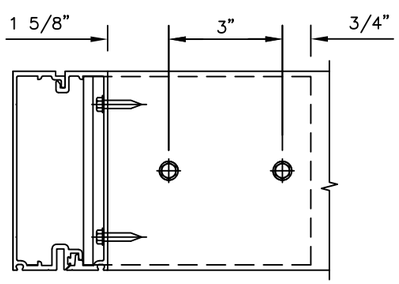

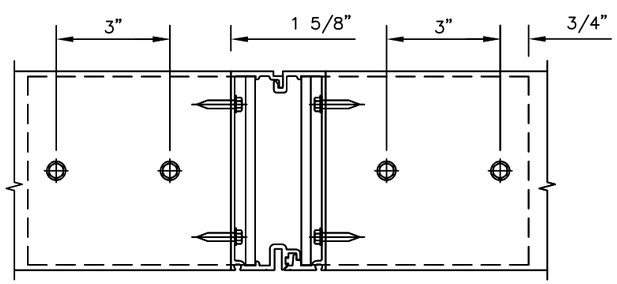

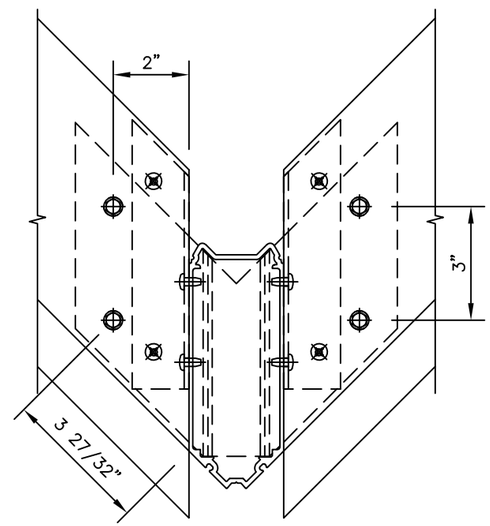

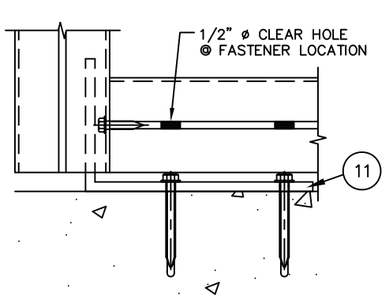

20
12

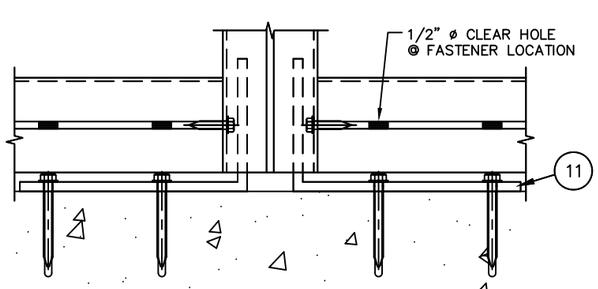

21
12

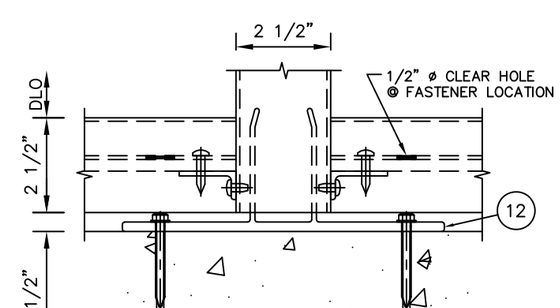

22
12

REV.#	DATE	
2	10/18/26	CODE UPDATE
1	4/13/21	DRAFTING REVISION
–	10/12/20	1ST SUBMITTAL
		PRINTS ISSUED FOR

KAWNEER
AN ARCONIC COMPANY
5555 WINDWARD PARKWAY, SUITE 220
ALPHARETTA, GA 30004
PH: (770) 449-5555
WWW.KAWNEER.COM

SEAL:

SCOTT WOLTERS
LICENSE
No 62354
STATE OF FLORIDA
PROFESSIONAL ENGINEER
OCT 18, 2026

SCOTT WOLTERS
FL PE# 62354

WOLTERS ENGINEERING
(COA# 27194)
15211 97TH ROAD N
WEST PALM BEACH, FL 33412
PH/FAX: (561) 225-1982

PRODUCT: CLEARWALL CURTAINWALL SYSTEM

DWG: CLRWL-IR

SECTION: 6

SHEET: 12/16

HEAD/SILL ANCHOR DETAILS

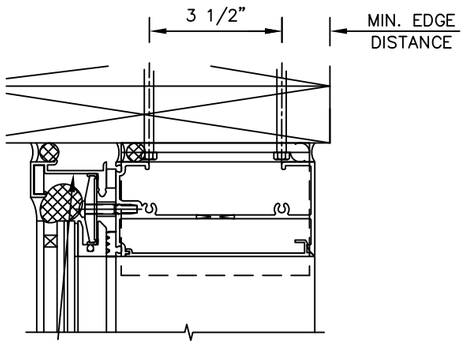

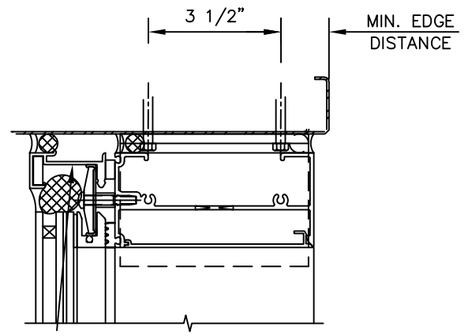

HEAD/SILL ANCHOR SCHEDULE			
BASE MATERIAL	FASTENER TYPE	EMBEDMENT (MIN)	EDGE DISTANCE (MIN)
WOOD (S.G. = 0.5 MIN)	1/4" DIA. SHEET METAL SCREW (300 SERIES SS MIN)	2"	1"
METAL STUD (16 Ga, 45 ksi MIN.)	1/4" DIA. ITW TEKS SCREW[2] 1/4" DIA. DEWALT BI-FLEX 1/4" DIA. DEWALT DRIL-FLEX	FULL[1]	3/4"

1. FASTENER THREADS MUST FULLY PENETRATE THE WALL THICKNESS OF THE STEEL, WITH 3 ADDITIONAL THREADS BEYOND, FOR FULL EMBEDMENT.
2. CLIMASEAL ACR COATING IS REQUIRED WITHIN 3000 ft. OF A SALTWATER COASTLINE.

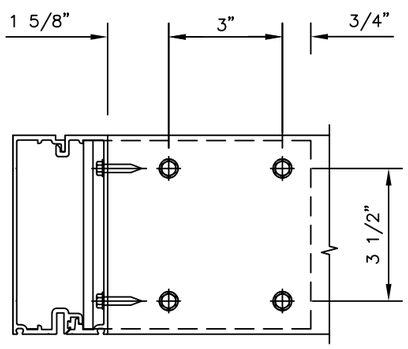

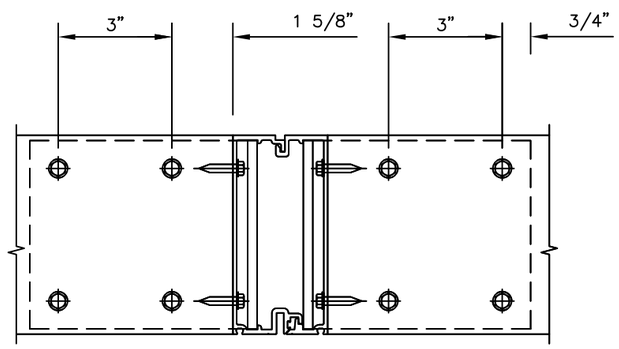

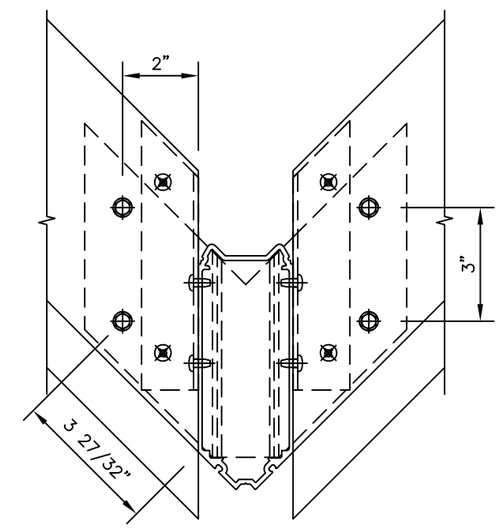

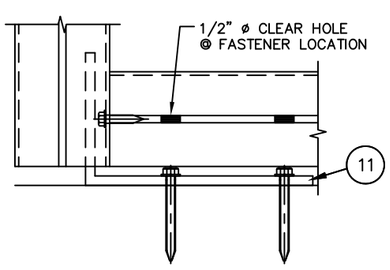

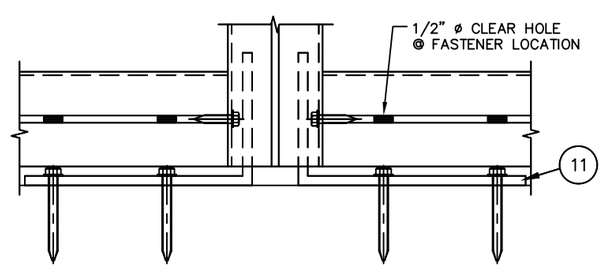

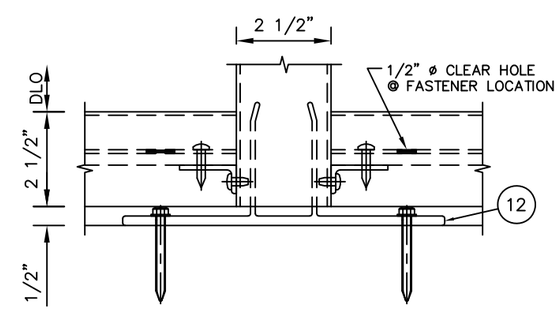

20 / 13

21 / 13

22 / 13

REV.#	DATE	
2	10/18/26	CODE UPDATE
1	4/13/21	DRAFTING REVISION
–	10/12/20	1ST SUBMITTAL
–	–	PRINTS ISSUED FOR

KAWNEER
AN ARCONIC COMPANY
5555 WINDWARD PARKWAY, SUITE 220
ALPHARETTA, GA 30004
PH: (770) 449-5555
WWW.KAWNEER.COM

SEAL:

SCOTT WOLTERS LICENSED PROFESSIONAL ENGINEER No 62354 STATE OF FLORIDA
OCT 08, 2026

SCOTT WOLTERS
FL PE# 62354

WOLTERS ENGINEERING
(COA# 27194)
15211 97TH ROAD N
WEST PALM BEACH, FL 33412
PH/FAX: (561) 225-1982

PRODUCT: CLEARWALL CURTAINWALL SYSTEM

DWG: CLRWL-IR

SECTION: 6

SHEET: 13/16

MID-SPAN ANCHOR DETAILS

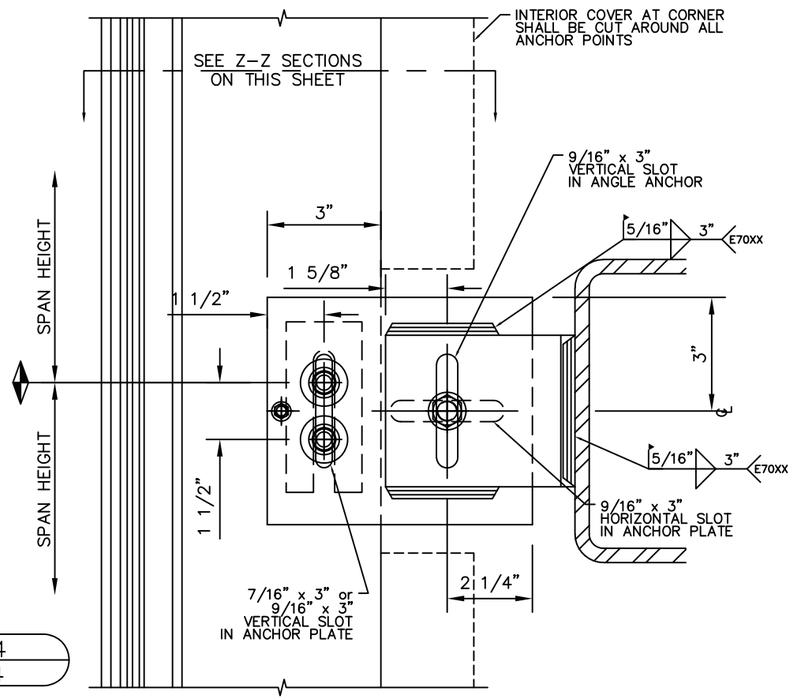

24
14

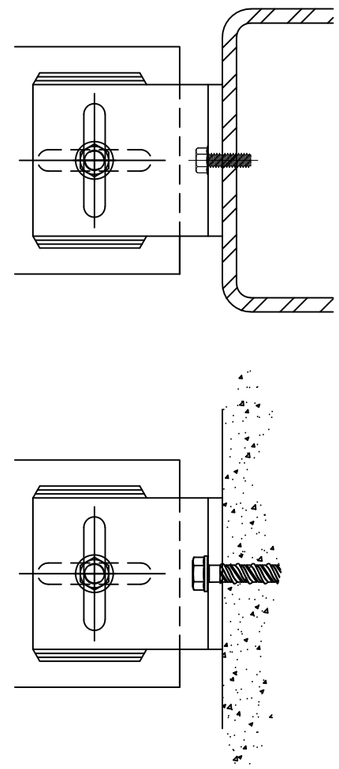

MID-SPAN ANCHOR SCHEDULE

MULLION BOLTS		
	FASTENER TYPE	MAX. ANCHOR REACTION
	3/8" DIA. HH BOLT, LOCK-NUT & WASHERS ((2) PER MULLION, 300 SERIES SS MIN)	2180 lb.
	1/2" DIA. HH BOLT, LOCK-NUT & WASHERS ((2) PER MULLION, 300 SERIES SS MIN)	3754 lb.

STEEL ANCHOR PLATE TO STEEL ANGLE BOLTS		
	FASTENER TYPE	MAX. ANCHOR REACTION
	1/2" DIA. HH BOLT, LOCK-NUT & WASHERS ((1) PER ANGLE, 300 SERIES SS MIN)	3754 lb.

STEEL ANGLE TO BASE MATERIAL			
BASE MATERIAL	FASTENER TYPE	EMBEDMENT (MIN)	EDGE DISTANCE (MIN)
CONCRETE (3000 psi MIN)	1/2" DIA. DEWALT SCREWBOLT+ ((1) PER ANGLE)	3 1/2"	4"
	1/2" DIA. HILT KWIK HUS-EZ ((1) PER ANGLE)	3 1/2"	4"
STEEL (1/4" Thick, 36 ksi MIN.)	1/2" DIA. DEWALT TAP-FLEX ((1) PER ANGLE)	FULL[1]	1 1/4"
	1/2" DIA. F-TYPE THREAD FORMING SCREW ((1) PER ANGLE, SAE Gr. 5 MIN)		
	1/2" DIA. THRU-BOLT, LOCK-NUT, & WASHERS ((1) PER ANGLE, 300 SERIES SS MIN)		

1. FASTENER THREADS MUST FULLY PENETRATE THE WALL THICKNESS OF THE STEEL, WITH 3 ADDITIONAL THREADS BEYOND, FOR FULL EMBEDMENT.

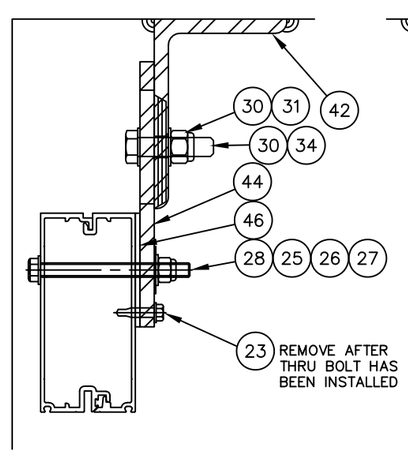

Z–Z
JAMB

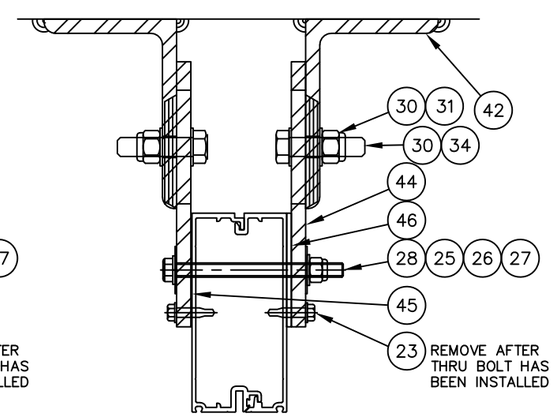

Z–Z
MULLION

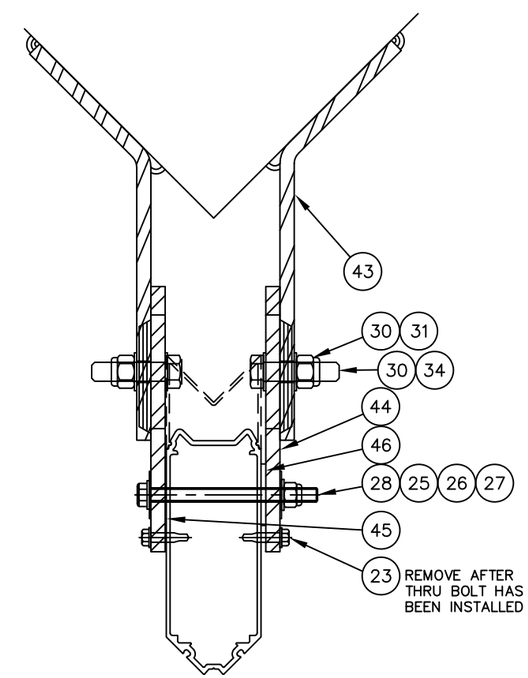

Z–Z
CORNER

REV.#	DATE	
–	10/18/26	CODE UPDATE
2	4/13/21	DRAFTING REVISION
1	10/12/20	1ST SUBMITTAL
–	–	PRINTS ISSUED FOR

KAWNEER
AN ARCONIC COMPANY
5555 WINDWARD PARKWAY, SUITE 220
ALPHARETTA, GA 30004
PH: (770) 449-5555
WWW.KAWNEER.COM

SEAL:

SCOTT WOLTERS LICENSE No 62354 STATE OF FLORIDA PROFESSIONAL ENGINEER
OCT 18, 2026

SCOTT WOLTERS
FL PE# 62354
WOLTERS ENGINEERING
(COA# 27194)
15211 97TH ROAD N
WEST PALM BEACH, FL 33412
PH/FAX: (561) 225-1982

PRODUCT: CLEARWALL CURTAINWALL SYSTEM

DWG: CLRWL–IR

SECTION: 6

SHEET: 14/16

BILL OF MATERIALS

NO.	PART NO.	DESCRIPTION	DIMENSIONS	MATERIAL
		EXTRUSIONS		
01	172010	5-1/4" HEAD/SILL HORIZ.	2.500 x 5.250 x 0.100	6063 T6 ALUMINUM
02	162020	5-1/4" OPEN BACK FILLER	0.434 x 4.973 x 0.090	6063 T6 ALUMINUM
03	172017	SSI PERIMETER TRIM	1.000 x 2.000 x 0.080	6063 T6 ALUMINUM
04	172203	PERIMETER TRIM SLEEVE	0.750 x 0.250 x 2.500	6063 T6 ALUMINUM
05	172009	5-1/4" HORIZONTAL	2.500 x 5.250 x 0.100	6063 T6 ALUMINUM
06	172003	5-1/4" MALE MULLION	1.831 x 5.250 x 0.100	6063 T6 ALUMINUM
07	172004	5-1/4" FEMALE MULLION	1.365 x 5.250 x 0.100	6063 T6 ALUMINUM
08	162254	SSG CORNER MULLION	2.500 x 6.473 x 0.100	6063 T6 ALUMINUM
09	162255	SSG CORNER COVER	2.500 x 2.458 x 0.080	6063 T6 ALUMINUM
10	172025	CORNER INTERFACE	2.217 x 0.750 x 0.100	6063 T6 ALUMINUM
11	169212	HEAD/SILL ANGLE ANCHOR	3.500 x 6.000 x 0.250 x 4.969	6063 T6 ALUMINUM
12	162549	"T" ANCHOR	3.250 x 8.500 x 0.250 x 8.811	6063 T6 ALUMINUM
13	172202	5-1/4" MULLION SPLICE SLEEVE	5.227 x 4.969 x 0.180 x 12.000	6063 T6 ALUMINUM
14	172231	MULLION SLEEVE	2.260 x 4.750 x 0.125 x 12.000	6063 T6 ALUMINUM
15	172225	CORNER SHEAR BLOCK	1.460 x 1.660 x 0.125 x 7.071	6063 T6 ALUMINUM
16	172226	CORNER SHEAR BLOCK	1.500 x 0.750 x 0.125 x 7.776	6063 T6 ALUMINUM
17	172227	CORNER SHEAR BLOCK	1.500 x 0.750 x 0.125 x 7.776	6063 T6 ALUMINUM
18	128509	SPLINE SCREW	#12 x 1" AB HHTF	300 SERIES STAINLESS STEEL
19	128396	SHEAR BLOCK SCREW	#12 x 7/16" B PHTF	430 SERIES STAINLESS STEEL
20	128405	SHEAR BLOCK SCREW	#12 x 7/8" AB FHTF	300 SERIES STAINLESS STEEL
21	128267	SHEAR BLOCK SCREW / SPLICE SCREW	#12 x 1" AB PHTF	300 SERIES STAINLESS STEEL
22	128388	JAMB SPLICE SCREW	#12 x 3" AB FHTF	300 SERIES STAINLESS STEEL
23	128402	TEMPORARY ANCHOR ATTACHMENT SCREW	1/4" -14 x 1" HWHSFSD	300 SERIES STAINLESS STEEL
24	977176	ANCHOR BOLT	3/8"-16 x 4" HEX BOLT	300 SERIES STAINLESS STEEL
25	128596	FLAT WASHER	3/8" WASHER	300 SERIES STAINLESS STEEL
26	128392	ANCHOR NUT	3/8-16 HEX LOCKNUT	300 SERIES STAINLESS STEEL
27	216301	SLIP WASHER	3/8" FENDER WASHER	300 SERIES STAINLESS STEEL
28	128918	ANCHOR BOLT	3/8"-16 x 4-1/2" HEX BOLT	300 SERIES STAINLESS STEEL
29	PURCHASE	ANCHOR BOLT	1/2"-13 x 4" HEX BOLT	300 SERIES STAINLESS STEEL
30	128260	FLAT WASHER	1/2" WASHER	300 SERIES STAINLESS STEEL
31	128391	ANCHOR NUT	1/2-13 HEX LOCKNUT	300 SERIES STAINLESS STEEL
32	PURCHASE	SLIP WASHER	1/2" FENDER WASHER	300 SERIES STAINLESS STEEL
33	PURCHASE	ANCHOR BOLT	1/2"-13 x 4-1/2" HEX BOLT	300 SERIES STAINLESS STEEL
34	128393	ANCHOR BOLT	1/2-13 x 2" HEX BOLT	300 SERIES STAINLESS STEEL
35	028266	REINFORCING ATTACHMENT SCREW	#10 x 3/4" PHTFS	CARBON STEEL
36	028687	REINFORCING ATTACHMENT SCREW	1/4" x 1-1/2" PHTFS	CARBON STEEL
37	904208	REINFORCING ATTACHMENT SCREW	1/4-20 x 1-1/2" FHTC D @ 48" OC	CARBON STEEL
38	PURCHASE	ELCO ULTRACON CONCRETE SCREW	1/4" x 2-1/4"	CARBON STEEL STALGUARD COATED
39	PURCHASE	STEEL BAR REINFORCING	0.375 x 4.000 x SEE ELEVATION	GRADE 50 STEEL
40	162301	STEEL REINFORCING	1.750 x 4.560 x 0.164 x SEE ELEV	GRADE 50 STEEL
41	162302	STEEL REINFORCING	1.500 x 3.810 x 0.164 x SEE ELEV	GRADE 50 STEEL
42	PURCHASE	STEEL ANGLE ANCHOR	3.500 x 5.000 x 0.375 x 4.000 LONG	GRADE A36 STEEL
43	PURCHASE	BENT STEEL ANCHOR	4.000 x 8.500 x 0.375 x 4.000 LONG	GRADE A36 STEEL
44	PURCHASE	STEEL ANCHOR PLATE FOR 3/8" ANCHOR BOLT	7.000 x 6.000 x 0.375	GRADE A36 STEEL
45	027477	SEPARATOR	2.000 X 4.500 X 0.031	THERMAL-TORK TN-9004
46	PURCHASE	SHIM	0.125 THICK	PLASTIC
47	127159	SG TAPE	0.500 x 0.250	POLYURETHANE FOAM
48	127164	3M VHB SG TAPE B23F	0.875 x 0.090	CONFORMABLE ACRYLIC FOAM (CLOSED CELL)
49	162120	TEMPORARY CORNER GLAZING	1.915 x 5.083 x 0.100 x 4.000	6063 T6 ALUMINUM
50	028961	TEMPORARY CORNER GLAZING CLIP SCREW	1/4-20 x 4" PHMS TYPE 1	300 SERIES STAINLESS STEEL
51	027857	FIXED GASKET	0.310 x 0.360	SHORE "-A" 70±5 DUROMETER EPDM
52	PURCHASE	STEEL ANCHOR PLATE FOR 1/2" ANCHOR BOLT	7.000 x 6.000 x 0.375	GRADE A36 STEEL
53	128348	CROSS RECESSED COUNTER SUNK SCREW	#10-16 x 1-1/4" FHSD	300 SERIES STAINLESS STEEL

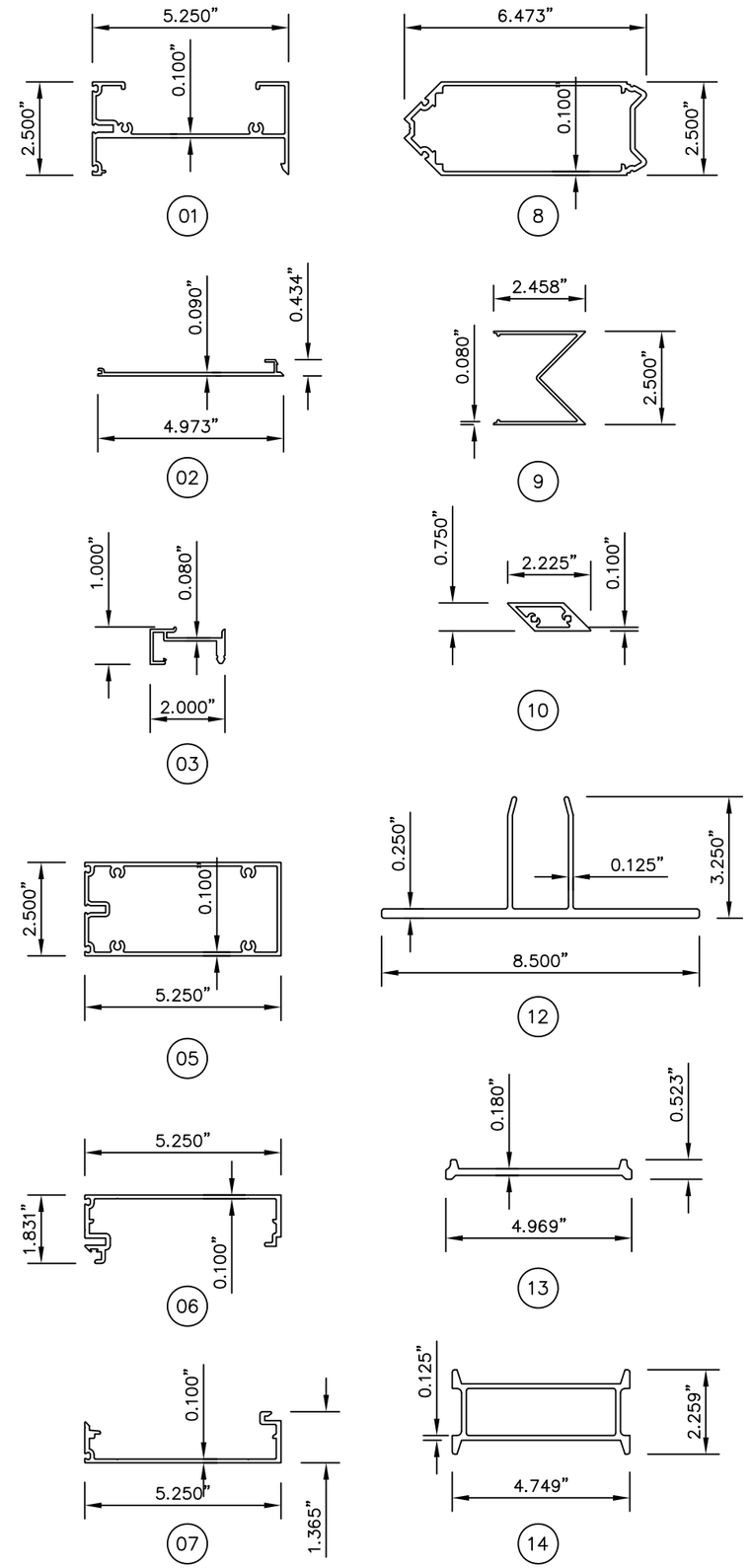

–	CODE UPDATE	2	10/18/26
–	DRAFTING REVISION	1	4/13/21
–	1ST SUBMITTAL	–	10/12/20
	PRINTS ISSUED FOR	REV.#	DATE

KAWNEER
AN ARCONIC COMPANY
5555 WINDWARD PARKWAY, SUITE 220
ALPHARETTA, GA 30004
PH: (770) 449-5555
WWW.KAWNEER.COM

SEAL:

SCOTT WOLTERS
FL PE# 62354

WOLTERS ENGINEERING
(COA# 27194)
15211 97TH ROAD N
WEST PALM BEACH, FL 33412
PH/FAX:(561) 225-1982

PRODUCT: CLEARWALL CURTAINWALL SYSTEM

DWG: CLRWL-IR

SECTION: 7

SHEET: 15/16

TOGGLE LOCATION ISOMETRIC

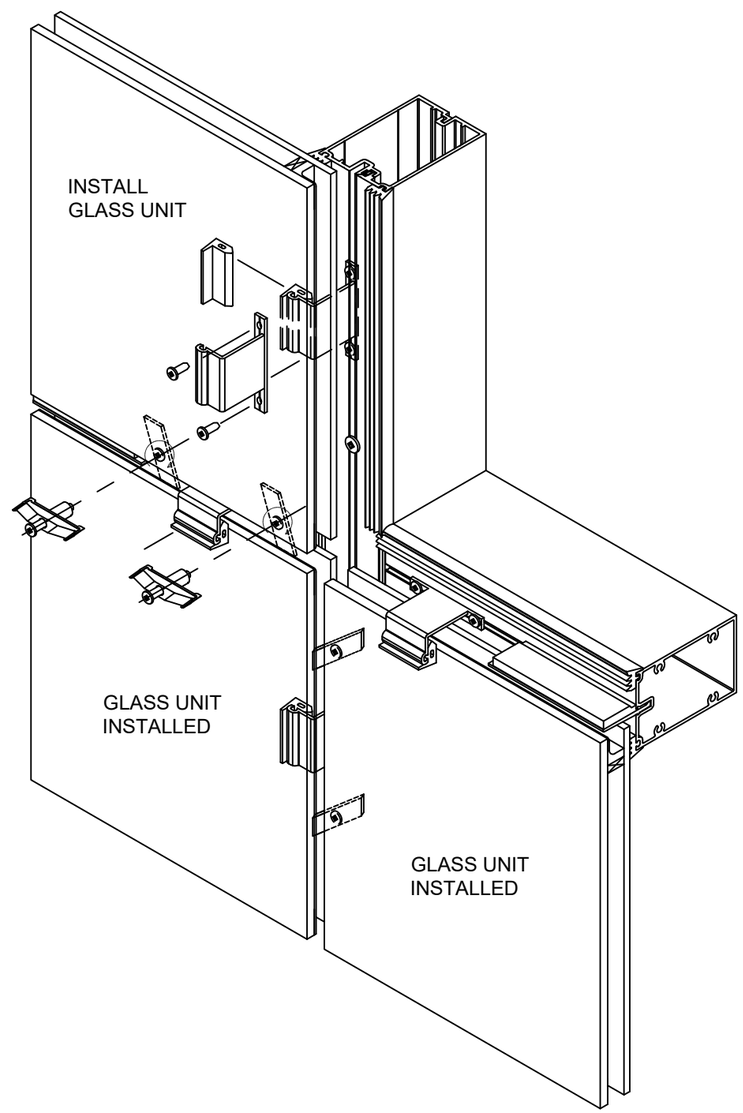

TOGGLE LOCATIONS ARE TO BE NO MORE THAN 3" FROM THE CORNER OF THE GLASS ASSEMBLY AND A MAXIMUM OF 6" ON CENTER.

MAXIMUM GLAZING TEMPORARY SPACING IS 24" ON CENTER.

REV.#	DATE	
–	–	CODE UPDATE
2	10/18/26	DRAFTING REVISION
1	4/13/21	1ST SUBMITTAL
–	10/12/20	PRINTS ISSUED FOR

KAWNEER
AN ARCONIC COMPANY
5555 WINDWARD PARKWAY, SUITE 220
ALPHARETTA, GA 30004
PH: (770) 449-5555
WWW.KAWNEER.COM

SEAL:

SCOTT WOLTERS
FL PE# 62354

WOLTERS ENGINEERING
(COA# 27194)
15211 97TH ROAD N
WEST PALM BEACH, FL 33412
PH/FAX:(561) 225-1982

SCOTT WOLTERS LICENSE No 62354 STATE OF FLORIDA PROFESSIONAL ENGINEER
OCT 18, 2026

PRODUCT: CLEARWALL CURTAINWALL SYSTEM

DWG: CLRWL-IR

SECTION: 7

SHEET: 16/16